CEILING MOUNT

H.E. 240V (METRIC)

OWNER'S MANUAL

Ceiling Mount H.E. CM4000
Ceiling Mount H.E. CM8000

NOTICE: To activate the split system warranty, the installing certified HVAC/R service tech must complete the split system warranty checklist and send back to MacPhee's.

Split System Warranty Checklist

SCAN ME

WhisperKOOL®
The Future of KOOL

Conforms to ANSI/UL Std 427

Certified to CAN/CSA Std C22.2 No. 120

We manufacture, test and certify 100% of our wine cooling units in the USA. By sourcing the best components and closely controlling our manufacturing processes, we can assure the highest-quality, lowest defect manufacturing rates in the industry.

Copyright © 2022. WhisperKOOL. All rights reserved.

WhisperKOOL copyrights this manual, the product design, and the design concepts, with all rights reserved. Your rights with regard to the hardware and manual are subject to the restrictions and limitations imposed by the copyright laws of the USA. Under copyright laws, this manual may not be copied, reproduced, translated, transmitted, or reduced to any printed or electronic medium or to any machine-readable form, for any purpose, in whole or in part, without the written consent of WhisperKOOL.

Every effort has been made to ensure that the information in this manual is accurate. WhisperKOOL is not responsible for printing or clerical errors.

WhisperKOOL reserves the right to make corrections or improvements to the information provided and to the related hardware at any time, without notice.

Vinothèque and WhisperKOOL are registered trademarks, and ECE is a trademark of WhisperKOOL. All rights reserved.

Mention of third-party products is for informational purposes only and constitutes neither an endorsement nor a recommendation. WhisperKOOL assumes no liability with regard to the performance or use of these products.

TABLE OF CONTENTS

Introduction 3
Before You Start 4
Preparing The Wine Cellar 5
Receiving & Inspecting the System 7
Quick Reference Guide
Knockout Locations. 9
Liquid-Measuring Thermostat System (Bottle Probe) (KDT) 10
Evaporator Unit Installation
Items to Route before Installing the Evaporator Unit 11
24V Thermostat Conversion Kit Wiring Instructions 12
Selecting Mounting Option 13
Mounting the Evaporator Unit 14
Evaporator Unit Preparation. 15
Installing the Evaporator Unit 16
Connecting The Lineset 17
Insulation Blanket Installation 19
Drain Line. 21
Remote Display Installation
Wall Mount Bracket Installation 22
Flush Mount Bracket Installation 25
Wiring Diagrams
Ceiling Mount - KDT 28
Condensing Unit 29
Line Set Piping Diagrams 30
Preparing the Condensing Unit
Condensing Unit Wiring. 32
Installing the Condensing Unit 33
TXV Adjustment 37
Display Layout And Specifications. 39
Filter 41
Line Set, Drain Tube, and Electrical Connections 42
Controller Functions 43
Icon Glossary 44
Alarm Codes 45
User Menu 46
Troubleshooting Guide 47
System Operation (KDT) 49
Maintenance Schedule 50

⚠ WARNING ⚠

The evaporator unit (fan coil unit) must be insulated using the insulation blanket provided in accordance with this manual. Refer to the insulation blanket installation instructions.

Failure to follow the instructions provided will result in a poor vapor barrier, water damage, rust, and system corrosion which will void the warrantyon your unit.

The evaporator unit (fan coil unit) must be insulated using polyester insulation batts (R3.5) in addition to the provided insulation blanket. This includes the cavity between the ceiling joists. A warm attic environment will reduce the capacity of the cooling system, as the system will absorb heat from the attic in addition to the heat load from the wine cellar. This, in effect, will significantly reduce the cooling system's ability to cool the wine cellar.

Failure to properly insulate the evaporator unit may cause condensation to form on the surface of the housing and water damage to the surrounding structure, the cooling unit, and possibly the wine cellar.

To avoid these issues, install the insulation kit and insulate the surface of the evaporator unit that is located outside of the wine cellar using polyester insulation batts (R3.5).

***Additional insulation is required!**

INTRODUCTION

Customer Service

Thank you for purchasing a WhisperKOOL cooling system. We strive to provide the highest-quality products and the best possible customer service. MacPhee's Customer Service is available Monday through Friday from 9:00 a.m. to 5:00 p.m. AEST. If you have any questions about your system, please email us at info@macphees.com.au.

Using the Manual

This manual is intended to assist in the proper maintenance of the cooling system. In order to ensure the longevity of your cooling unit, the equipment should be installed as outlined in the technician's manual. It is also vital to establish a proper care and maintenance schedule. Please read and review this manual carefully and keep it for future reference.

What is the WhisperKOOL Cooling System?

The WhisperKOOL cooling system is a specialized refrigeration system designed for one purpose only: to maintain the optimal temperature and humidity levels conducive to the proper storage and aging of fine wines. This system produces minimal in-cellar noise and has the most lenient exhaust requirements.

How Does the Cooling System Work?

Similar to the air conditioning systems used for homes, the evaporator unit and condensing units are installed in separate locations and are connected by a refrigerant line set. The evaporator portion is commonly installed in the wine cellar, with the condensing unit is located either outside or in a remote indoor location that is ventilated. An exterior housing is required for outdoor condensing unit installations.

Temperature Setting

The system is designed to maintain a cellar temperature of 14°C as long as the ambient temperature does not exceed 49°C.

BEFORE YOU START

1. **Inspect all components prior to installation.** If damage is found, please notify MacPhee's Customer Service at info@ macphees.com.au within 30 days.
2. The evaporator unit **requires a dedicated 240V, 15-amp circuit**. A surge protector is recommended to use with the unit.
3. Communication cable (18-5 thermostat wire) must be ran between the condensing unit and the evaporator unit. Only 2 of the communication wires will be used. For 24V thermostat equipped systems an 18-5 cable must be used to connect the thermostat to the evaporator unit.
4. You are **REQUIRED** to **install a drain line** to remove condensation from the evaporator unit (fan coil unit).
5. ***The warranty is not active until a warranty checklist has been received, reviewed, and approved.***
6. The system is intended for **use in properly designed and constructed wine cellars**. Hire a professional wine storage consultant with a valid contractor's license to build your wine cellar.
7. WhisperKOOL requires that all split systems be installed by a certified HVAC-R technician only.

If you encounter a problem with your WhisperKOOL system, please refer to the Troubleshooting Guide. If you have any further questions or concerns, or need assistance, please contact MacPhee's Customer Service at info@ macphees.com.au. Please be sure all testing has been completed prior to contacting Customer Service. Please have your results ready for your representative.

WARNING! Allowing your system to operate in temperatures of 49°C or above for extended periods of time will greatly decrease the life of your system and void your warranty. The cooler the temperature of the air entering the condenser coil, the more cooling capacity the system has. The less heat gain through the common wall, the less the electricity consumption.

RECEIVING & INSPECTING THE SYSTEM

- Use caution when lifting and check package for damage.
- Lift only at the designated hand-hold locations on the shipping container, or fully support the unit from underneath. A shipment may include one or more boxes containing accessories.
- Before opening the container, inspect the packaging for any obvious signs of damage or mishandling.
- Write any discrepancy or visual damage on the bill of lading before signing.
- Allow the condensing unit to sit for 24 hours prior to start-up. The condensing unit can be placed in the installation location, piped and evacuated during this time.
- Review the packing slip to verify contents.
- Check the model number to ensure it is correct.
- Check that all factory options ordered are listed.

If any items listed on the packing slip do not match your order information, contact MacPhee's Customer Service immediately.

Check all shipped boxes for the following contents:

Evaporator Unit Box

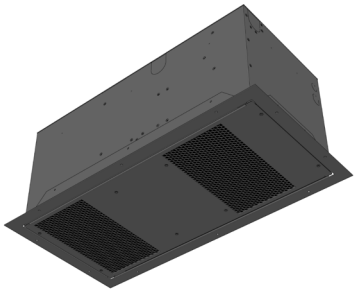

(1) Ceiling Mount evaporator unit

Condensing Unit Box

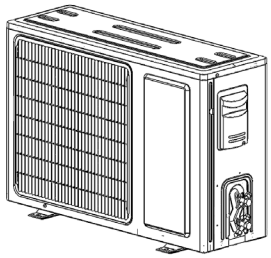

(1) Ceiling Mount condensing unit

Documentation bag:
- Ceiling Mount H.E. owner's manual
- R-134a split system warranty checklist

Accessory kit bag:
- Evaporator installation hardware bag

Evaporator installation hardware bag:
- (12) 64 mm Phillips wood screws
- (12) #8 10 mm Phillips pan-head screws
- (1) 6 mm barbed coupling
- (1) 13 mm Conduit Clamp Connector

<u>Standard Thermostat Only</u>
- Stainless steel probe (15 m)
- KDT Plus display cable (15 m)
- KDT Plus wall mount bracket assembly
- KDT Plus flush mount bracket assembly
- KDT Plus display assembly
- Flush mount template
- KDT Plus hardware bag

KDT Plus hardware bag:
- (1) 17 mm OD grommet
- (2) 13 mm nylon hole plug
- (4) #6 25 mm Phillips zinc Type A screw
- (4) 22 mm blue plastic screw anchor

Ceiling Mount insulation blanket bag:
- Ceiling Mount insulation blanket

TIP: Save your box and all packaging materials. They provide the only safe means of transporting/shipping the unit.

Single-piece mounting bracket

Please leave the unit in its original box until you are ready for installation. This will allow you to move the product safely without damaging it. When you are ready to remove the product from the box, refer to the installation instructions.

Bottom View

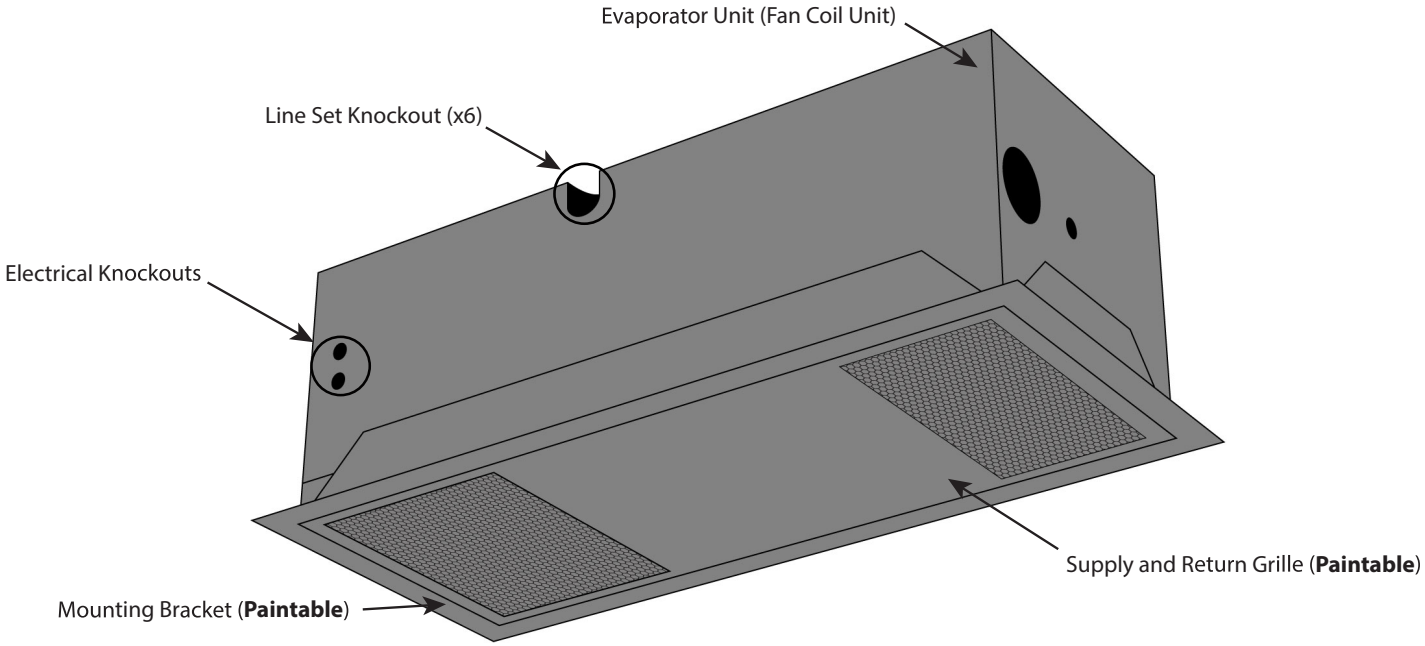

Top View

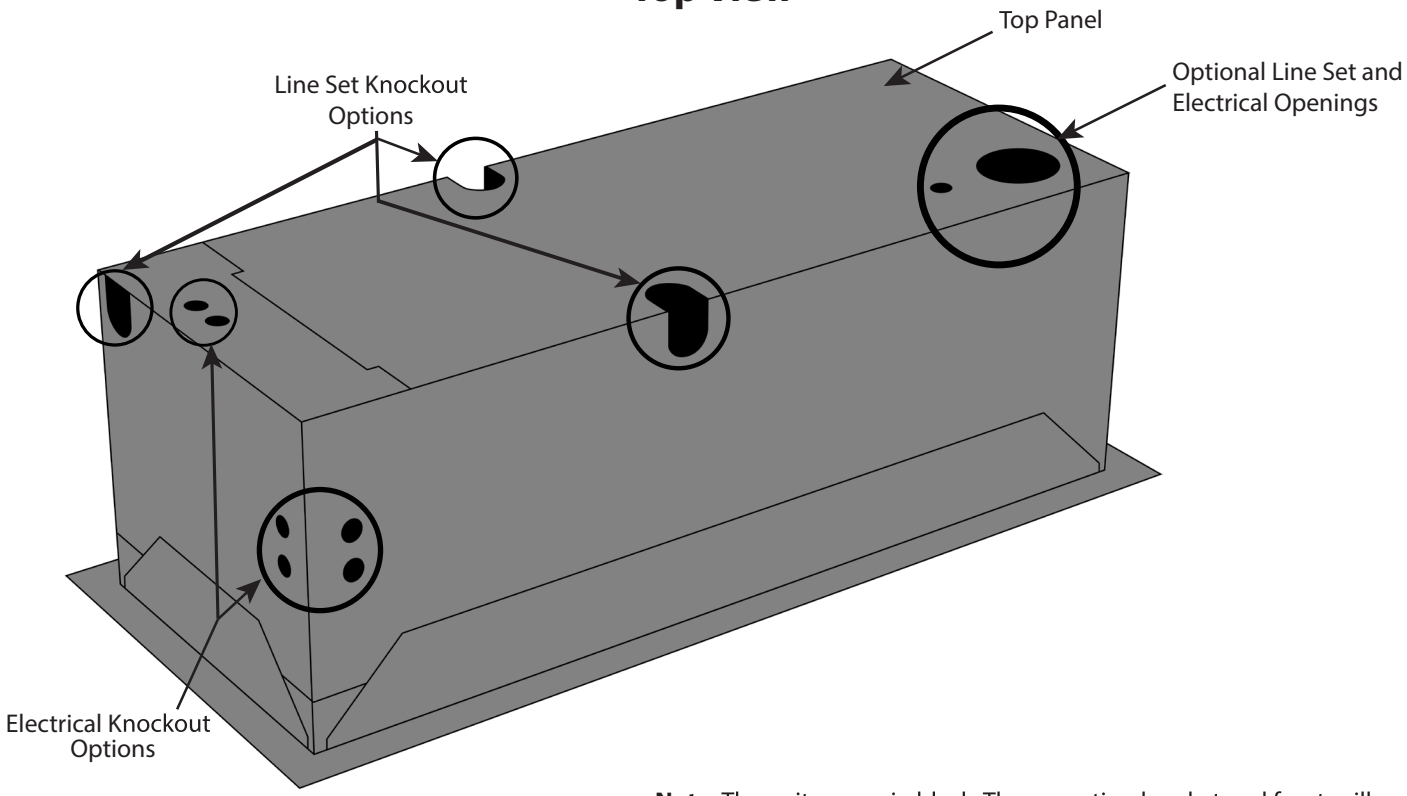

Note: The unit comes in black. The mounting bracket and front grille are paintable, enabling you to match your desired color.

KNOCKOUT LOCATIONS

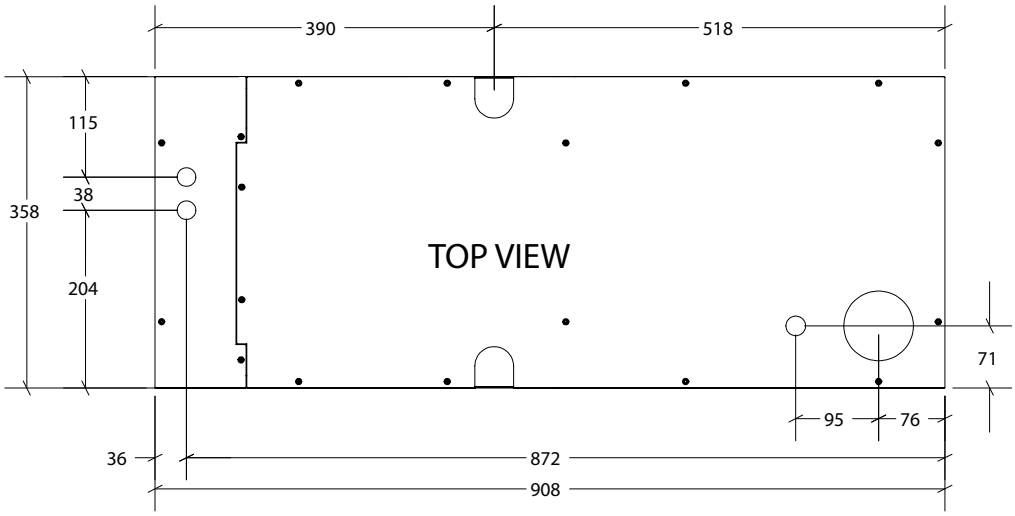

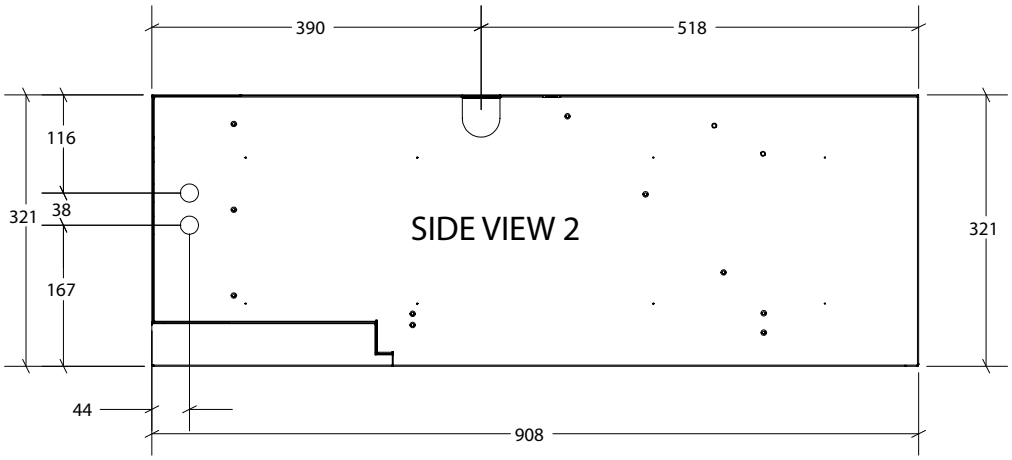

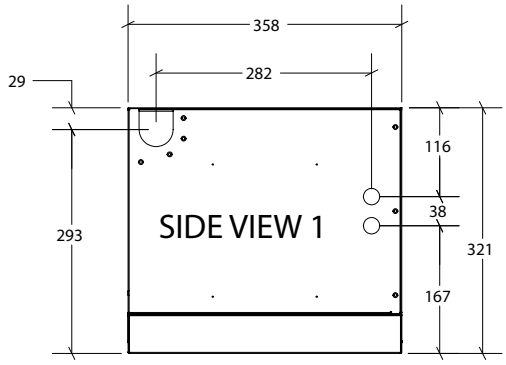

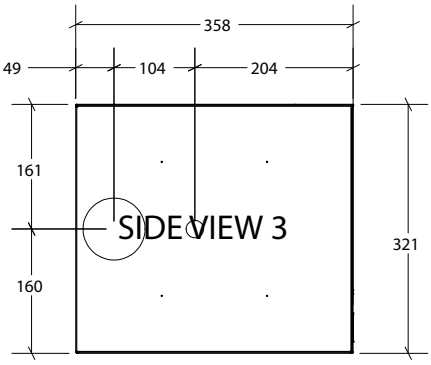

FAN SPEED SWITCH

The cooling system comes equipped with a variable fan speed switch. Increasing the fan speed increases the volume of cool air blown from the system. It is set by the factory to LOW. To access the fan speed switch it is necessary to remove the front grille.

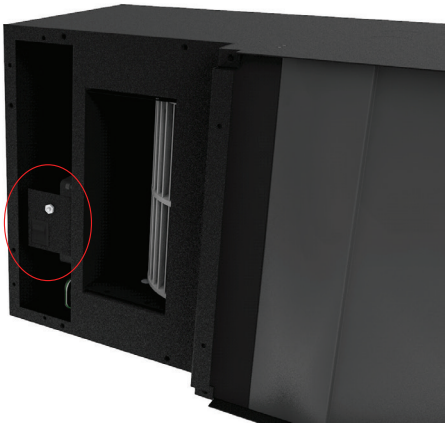

LIQUID-MEASURING THERMOSTAT SYSTEM (BOTTLE PROBE)

WhisperKOOL cooling units come with a liquid-temperature-measuring thermostat. The self-calibrating probe contains a sensor chip, which communicates back and forth with the thermostat. This results in a consistent temperature setting and accuracy. Wine should be kept at a very precise, controlled temperature and humidity. By measuring the liquid temperature rather than air, the unit will operate 75–80% of the time.

Setting up the Bottle Probe:

1. Locate an empty wine bottle.
2. Fill it 75% full with room-temperature tap water.
3. Place bottle probe securely into bottle as seen in Figure 1.
4. Place the wine bottle in your wine cellar. Ensure sensor tip is fully submerged.
5. To ensure a consistent temperature, place bottle probe approximately three (3) feet away from the air output and not in the flow of the air.

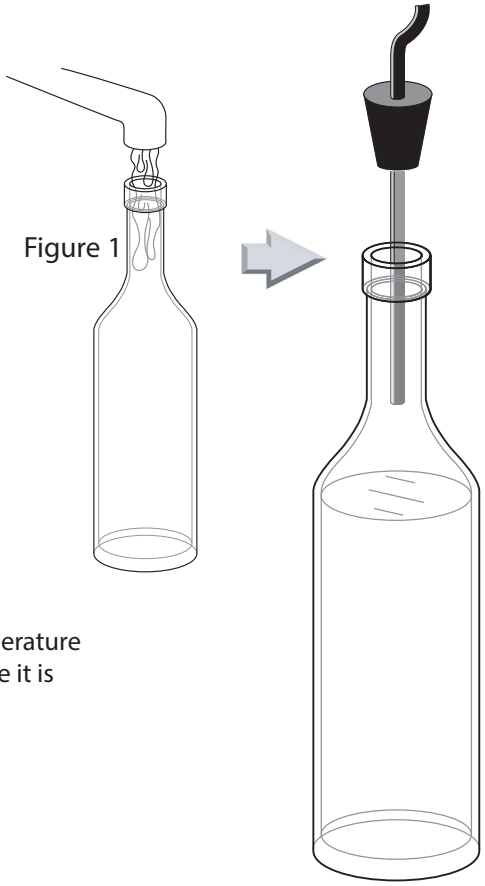

Figure 1

It is recommended that the bottle be placed in a central location of your wine cellar. Avoid pulling too much on the probe cord. It may become disconnected resulting in limited functionality of the unit.

Note: The thermostat can be set between 10-21°C.

Remember: The unit operates based on the temperature of the water. Do not be misled by thermostats reading air temperature. The air temperature in the cellar will be cooler than the liquid temperature of the wine while it is reaching the optimum balanced temperature.

ITEMS TO ROUTE BEFORE INSTALLING THE EVAPORATOR UNIT

1. Route the line set from the condensing unit to the desired evaporator unit installation location.
2. Route the display cable from the desired location to the evaporator installation location (see page 22 for more display information).
3. Route the bottle probe cable from the desired thermostat bottle location to the evaporator unit installation location (see page 21 for more bottle probe information).
4. Route the drain line from a proper discharge location to the evaporator unit installation location (see page 20 for more drain line information).
5. Route the power cable wiring to the evaporator unit installation location.

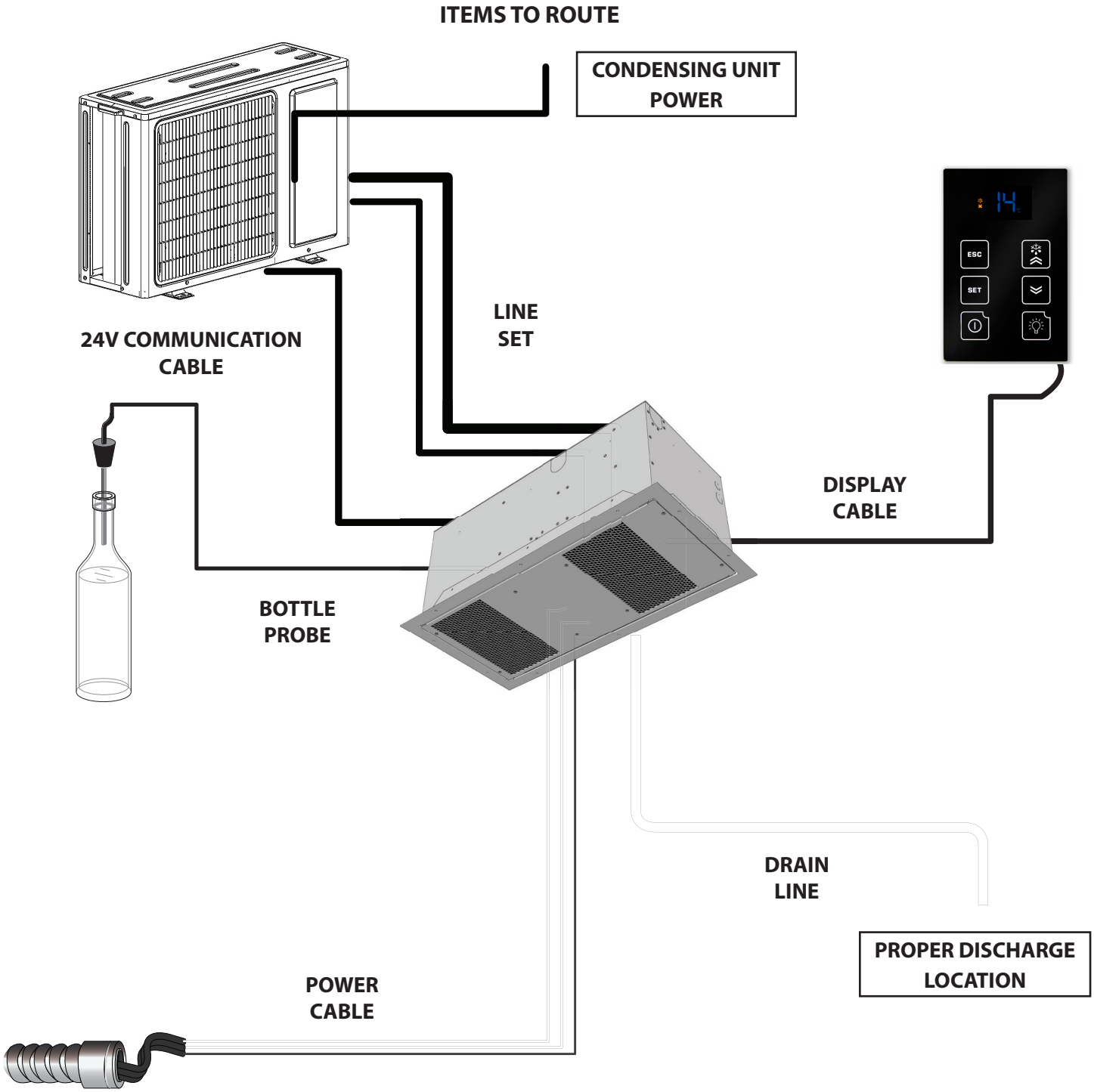

24V WIRING CONNECTIONS (EVAPORATOR UNIT)

The 24V thermostat conversion kit requires a standard 18-5 thermostat wire to be run from the evaporator unit to the thermostat. The white wire will not be used, as there is no heating function. (Some thermostats need a common wire and some do not; the unit is equipped with a common wire if needed.)18-5 thermostat wire (communication cable) must be run between the evaporator unit and the condensing unit.

24V Wiring Connections (Evaporator Unit)

1. Route a standard 18-5 thermostat wire into the evaporator unit.
2. Locate the wire thermostat connection cable inside of the evaporator unit.
3. Connect the wires according to color (red to red, green to green, and blue to blue). **NOTE:** The evaporator will not contain a yellow wire. See the next step for more information on the yellow wire.
4. Connect one wire from the 18-5 thermostat wire to the low-voltage yellow wire (1). Then connect the other 18-5 wire to the blue low-voltage wires (2). The other three wires will not be used.

Thermostat Wiring Connections

Follow the thermostat installation instructions. **NOTE:** The white wire will not be used, as there is no heating function.

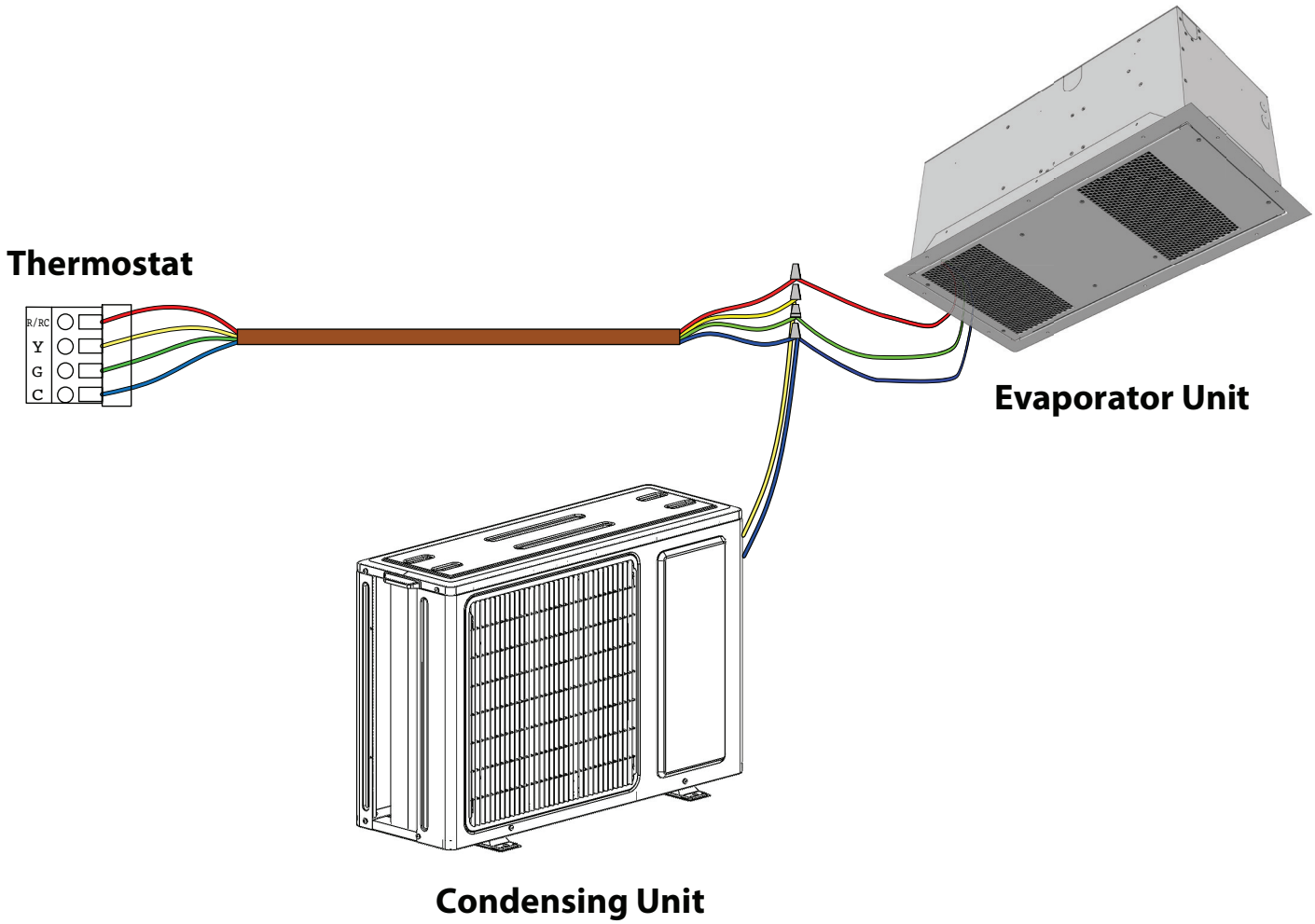

NOTE: To ensure correct system operation, the 24V thermostat must be placed inside the wine cellar, preferably in a central location away from any airflow.

SELECTING MOUNTING OPTION

Minimum Tools Needed:

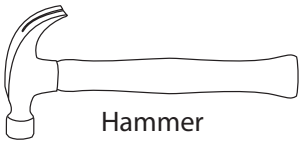

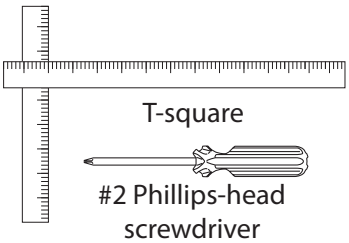

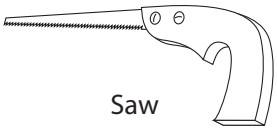

1. Locate the desired installation location. Using a stud finder, locate the ceiling joists on either side of the center point. Cut and frame an opening in the ceiling measuring 371 x 921 mm. Make sure the framing is sufficient to support the weight of the cooling unit. Use only the mounting locations provided. These locations ensure that the installer will not drill into any critical components within the system.
2. Determine which orientation the evaporator unit will be installed in (inside the cellar or with attic access). Mounting options are listed below:

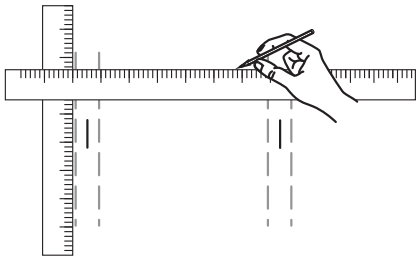

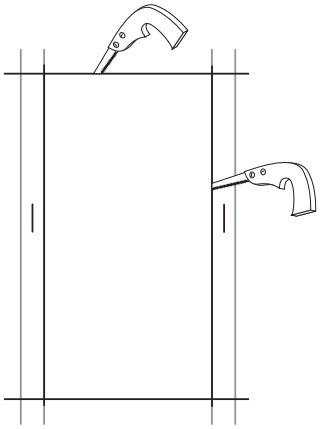

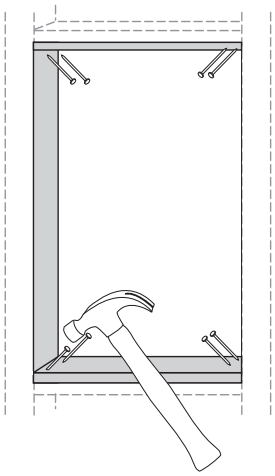

Choose a mounting option suitable for the installation location.

1 **Flush mount option**

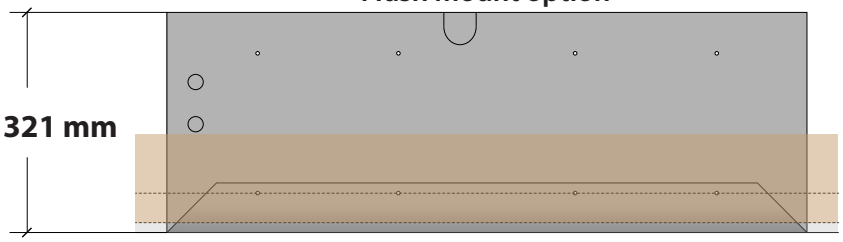

2 **Partially recessed mounting option**

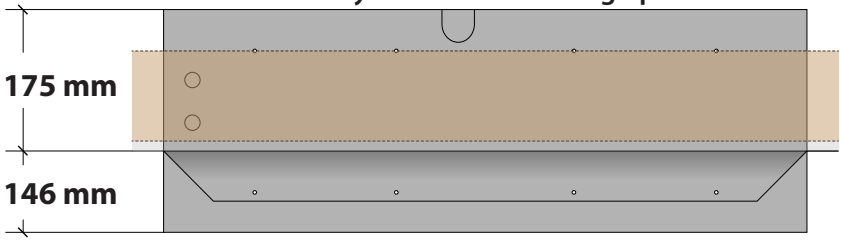

3

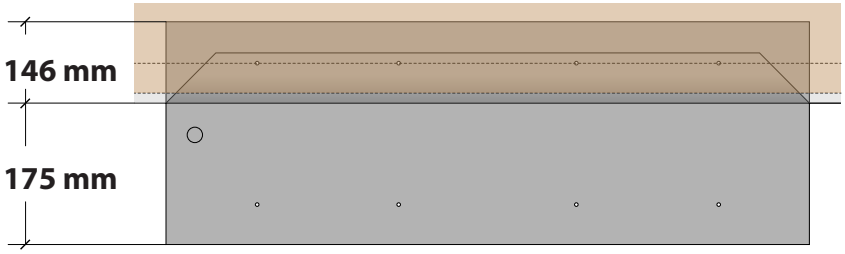

4 **Fully exposed mounting option**

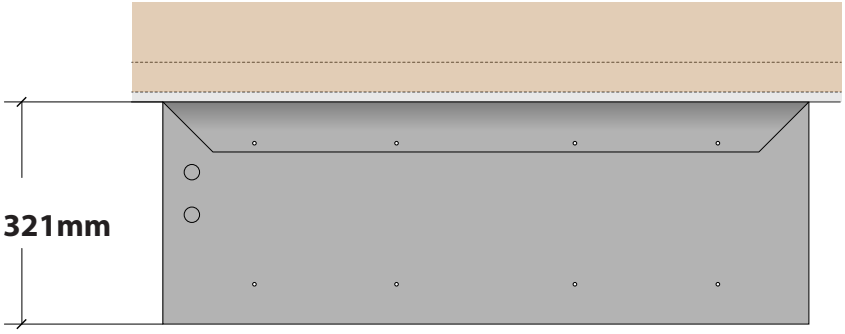

MOUNTING THE EVAPORATOR UNIT

NOTE: If installing the unit without attic access, perform steps 3-4 last.

3. Secure the mounting bracket to the unit using the twelve (12) supplied 10 mm Phillips pan-head screws.

NOTE: You are ***REQUIRED*** to use only the mounting locations provided. These locations ensure that the installer will not drill into any copper or electrical wiring within the system.

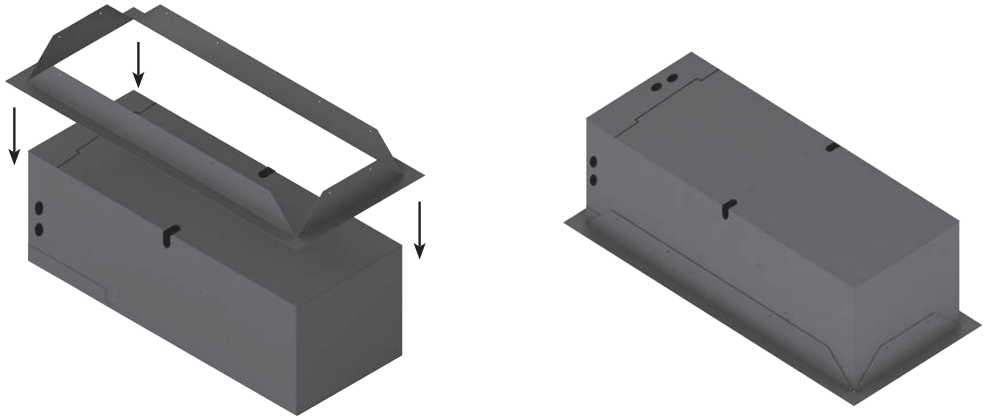

4. Secure the primary evaporator unit's mounting bracket to the opening using the twelve (12) supplied 64 mm Phillips-head screws.

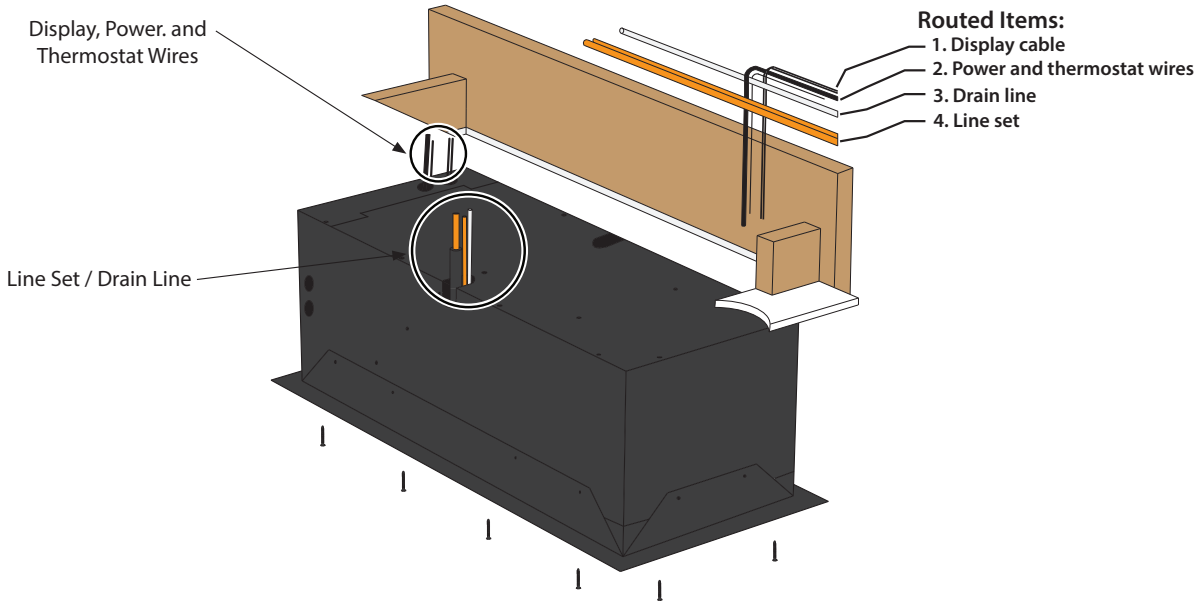

5. Unscrew the twenty-two (22) screws and remove the top and electrical access panels.

EVAPORATOR UNIT PREPARATION

6. Remove the knockout(s) that you will be using to route the line set, power wires, display cable, bottle probe, and drain line.

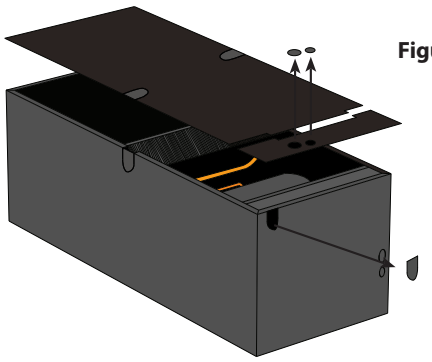

Figure 2

7. Using copper tubing per line set sizing chart, route the liquid and suction lines to the tubing coming from the unit.

8. Connect the line set according to the line set installation instructions.

9. Insulate the suction line using pair coil or similar insulation.

10. Route the drain line out of the evaporator unit with the line set. Connect using the supplied 6 mm barb coupling.

11. Connect hard line drain tubing to provided flex tubing.

NOTE: You are ***REQUIRED*** to use only the mounting locations provided. These locations ensure that the installer will not drill into any copper or electrical wiring within the system.

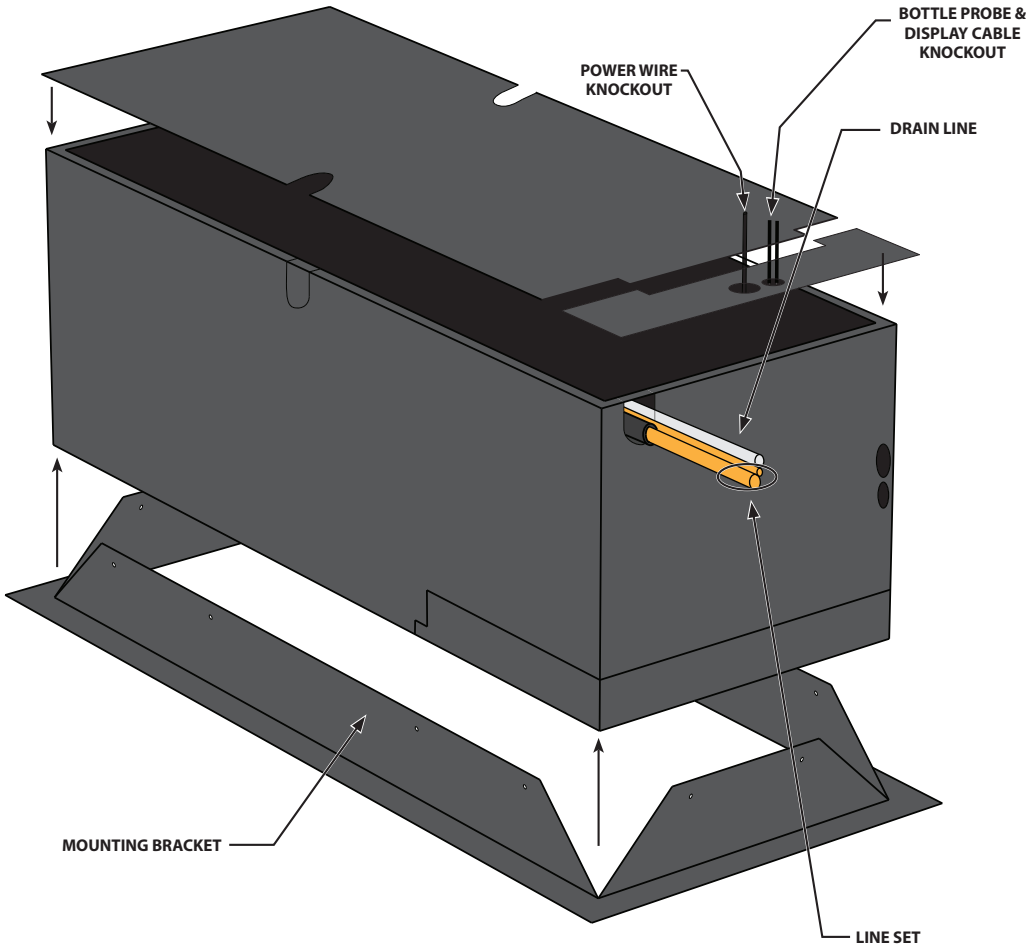

INSTALLING THE EVAPORATOR UNIT

12. Slide the electrical panel up and out of the unit.

13. Connect the end of the straight black bottle probe cable to the circular connector on the exterior of the electrical box.

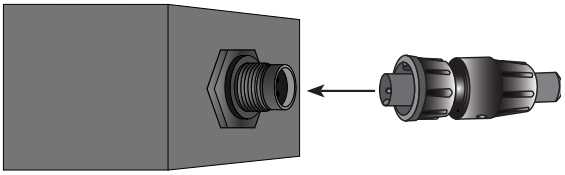

14. Connect the end of the display cable labeled "UNIT" to the wire labeled "UNIT" coming from the electrical box.

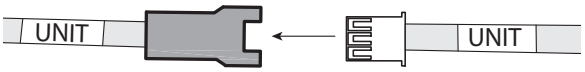

15. Slide the electrical panel back into the evaporator unit.

16. Reinstall the top access panel and fasten the eighteen (18) screws into place.

17. Insulate around the display cable, bottle probe, line set, and drain line to ensure no air is being pulled into the unit.

NOTE: The unit comes in black. The mounting bracket and front grille are paintable, enabling you to match your desired color.

CONNECTING THE LINESET

Connect the refrigerant piping according to these instructions.

1. **Cut the pipes**
   When cutting the pipes be very cautious to cut and flare them properly. This will ensure a proper connection and minimize the need for maintenance.

   1. Measure the distance between the indoor and outdoor units.
   2. Using a pipe cutter, cut the pipe. Cut just below your measured distance.
   3. Make sure that the pipe is cut at a perfect 90° angle. Refer to the example.

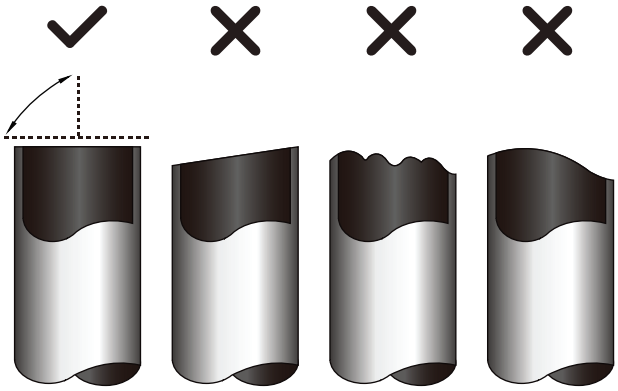

2. **Remove Burrs**
   Burrs can affect the air tight seal of refrigerant piping connection. They must be completely removed.

   1. Hold the pipe at a downward angle to prevent burrs from falling into the pipe.
   2. Using a reamer or deburring tool to remove all burrs from the cut section of the pipe.

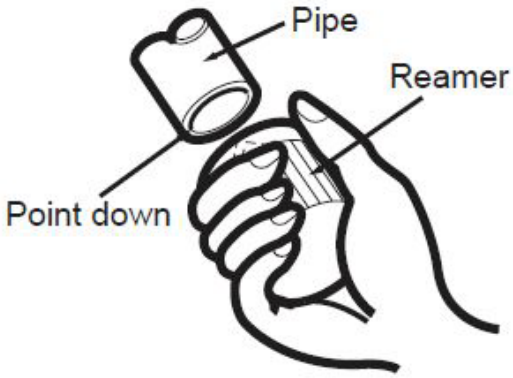

3. **Flare Pipe Ends**
   Proper flaring is essential to acheive an airtight seal.

   1. After removing burrs from cut pipe, seal the ends with PVC tape to prevent foreign materials from entering the pipe.
   2. Sheath the pipe with insulating material.
   3. Place flare nuts on both ends of pipe. (Flare nuts provided with lineset.) Make sure they are facing the right direction. After flaring the pipe the nuts will not be removable. Remove PVC tape ends of pipe when ready to perform flare work.
   4. Clamp flare form on end of pipe must extend beyond the edge of the flare form in accordance with the dimensions in the table (next page).
   5. Place flaring tool onto form.
   6. Turn the handle of the flaring tool clockwise until the pipe is fully flared.
   7. Remove the flaring tool and flare form, then inspect the ends for any cracks and make sure the flaring is even.

CONNECTING THE LINESET, CONTINUED

PIPING EXTENSION BEYOND FLARE FORM

Outer Diameter of Pipe (mm)	A (mm)	
	Min.	Max.
6 mm	0.70 mm	1.27 mm
10 mm	1.02 mm	1.60 mm
13 mm	1.02 mm	1.78 mm
16 mm	1.98 mm	2.18 mm
19 mm	1.98 mm	2.39 mm

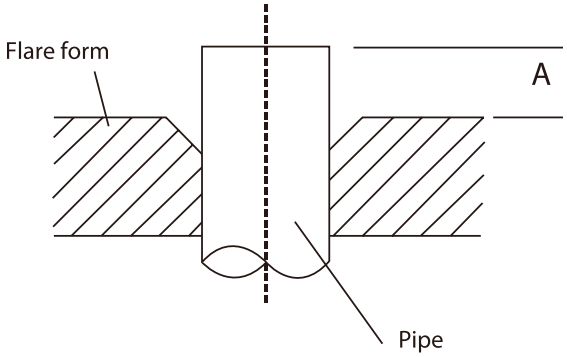

4. Connect Pipes

When connecting refrigerant pipes, be careful not to use any excessive torque or to deform the piping. You should first connect the low pressure pipe, then the high pressure pipe. It is recommended to use a CFC and HCFC compatible thread sealant on all threaded pipe connections.

1. Align the center of the two pipes that will be connected. To prevent gas leakage, apply refrigeration oil only to the inner surface of the flare. Use torque wrenches when tightening the flare nuts to prevent damage to the flare nuts and gas leakage.
2. Tighten the flare nut as tight as possible by hand.
3. Using a spanner, grip the nut on the unit tubing.
4. While firmly gripping the nut on the unit tubing, use a torque wrench to tighten the flare nut according to the torque values in the torque requirements table (**below)**. Loosen the flaring nut slightly, then tighten again. Prior to applying recommended torque to brass flare nut, it is highly recommended that a small amount of refrigeration oil be applied to the flare threads, flare sealing surface, and copper tubing flared surface. This will prevent galling of sealing surfaces and aid in providing a refrigerant tight seal (Use refrigeration oil for R134a). Be careful not to overtighten the connection, as this may damage the flare or fitting.

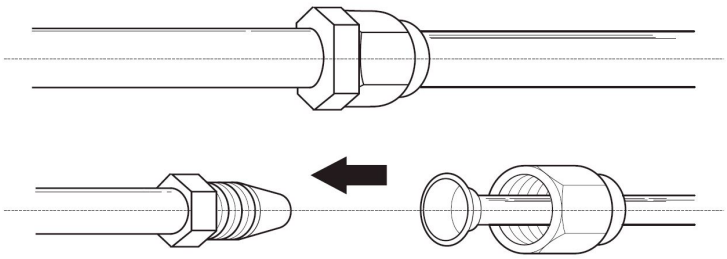

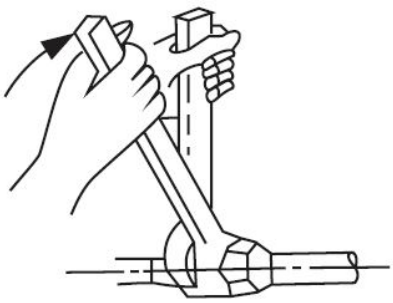

TORQUE REQUIREMENTS

Outer Diameter of Pipe (mm)	Tightening Torque (kg/m)
6 mm	16.37 kg/m
10 mm	27.38 kg/m
13 mm	38.39 kg/m
16 mm	49.39 kg/m
19 mm	71.34 kg/m

INSULATION BLANKET INSTALLATION

***Tools required: spray adhesive, utility knife, cork tape, foil tape**

Ceiling Mount blanket dimensions

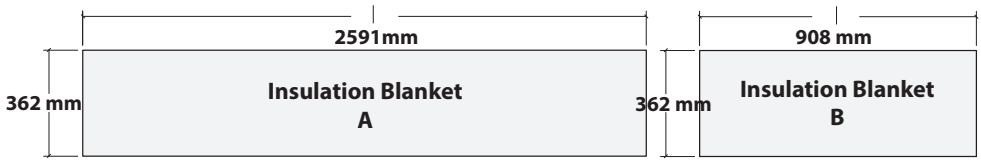

1. Once mounting bracket location has been selected and installed, proceed to the insulation blanket installation.
2. Spray adhesive onto the sides of the portions of the evaporator unit and mounting bracket which protrude into the attic. See spray adhesive directions for proper tack time before proceeding to step 3 (see illustration).

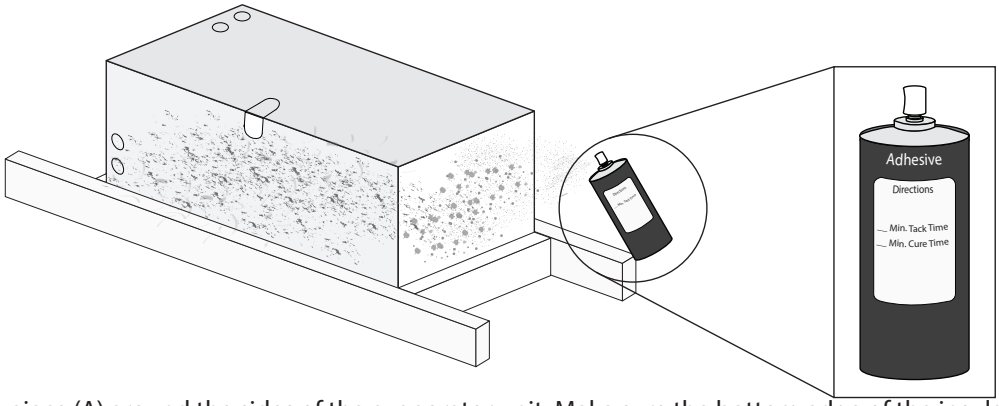

3. Wrap insulation piece (A) around the sides of the evaporator unit. Make sure the bottom edge of the insulation is flush with the top edge of the mounting bracket (see illustration).

If needed, trim excess insulation around all edges.

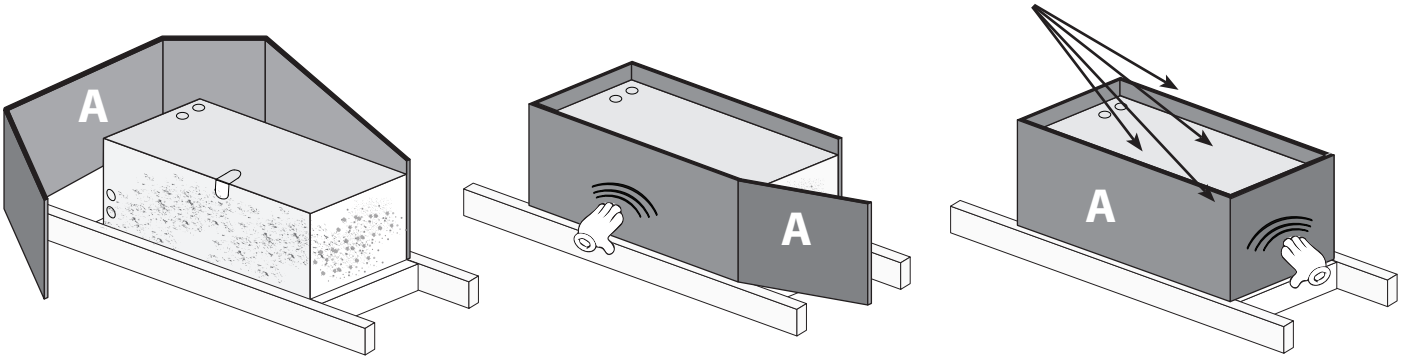

4. Set insulation in place by pressing firmly on all surfaces of the insulation that come in contact with the sides of the evaporator unit (see illustration).
5. Using a utility knife, cut holes in the insulation for the line set, wiring, and drain line if needed.
6. If necessary, cut the insulation to size using the top edge of the evaporator unit as a template. Remove excess insulation. Proceed to piece (B) installation.

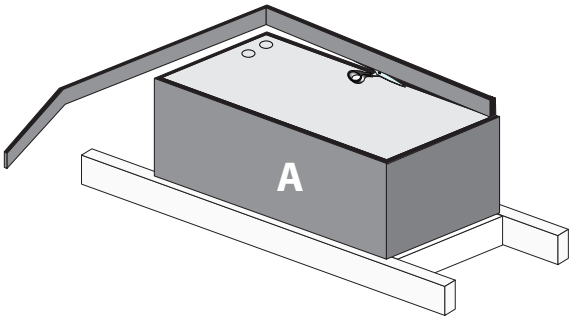

INSULATION BLANKET INSTALLATION, CONTINUED

7. Spray the top of the evaporator unit with spray adhesive. (See spray adhesive directions for proper tack time before proceeding to step 8.)

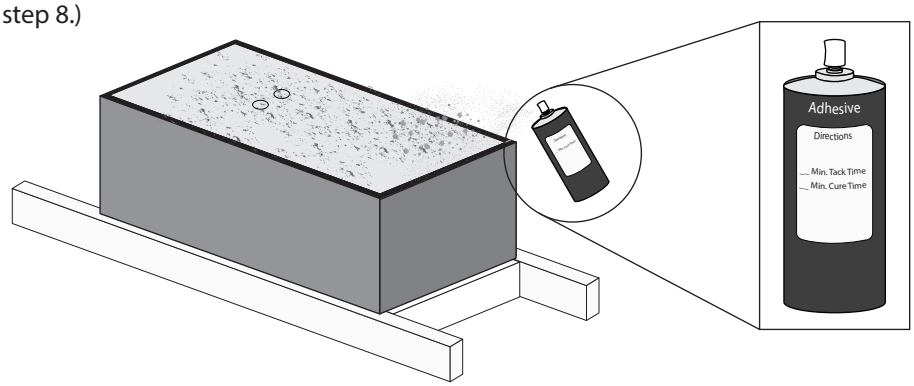

8. Set piece (B) in place by pressing firmly on all surfaces of the insulation that come in contact with the top of the evaporator unit (see illustration).

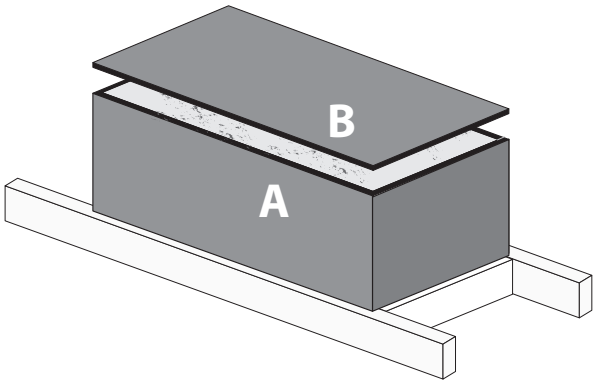

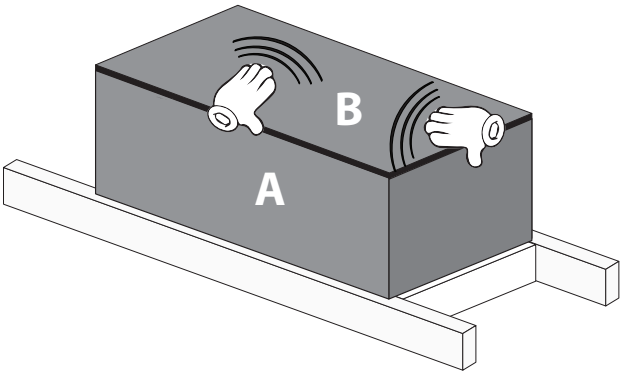

9. Using a utility knife, cut holes in the insulation for line set, wiring, and drain line if needed.

If needed, trim excess insulation around all edges.

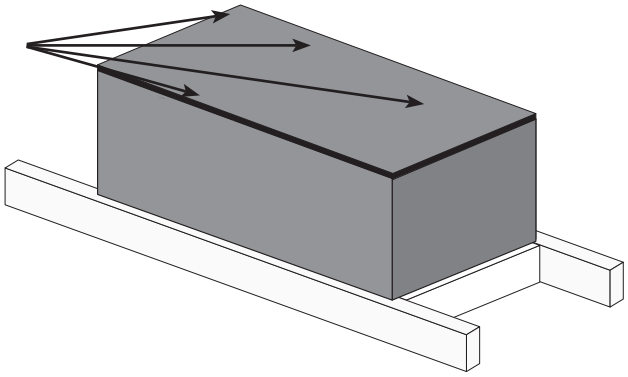

10. Once insulation is installed, apply foil tape to all seams, covering them completely.

11. Inspect insulation for damage/defects. If damaged, repair with foil tape.

12. Apply cork tape or equivalent to areas where the line set, wiring, and drain line enter the unit.

DRAIN LINE

Condensation Drain Line
The condensation drain line tube is used to remove excess condensation from the unit to a proper discharge location. It is important that the drain line tube is properly connected.

Failure to use the condensation drain line tube will void the warranty on the unit.

Drain Line
The Mini Ceiling Mount evaporator unit features a drain line pump system that removes excessive condensate build up in the drain pan. During operation, the drain pan collects water that drips from the coil. The drain line pump system will prevent overflow and leaking by allowing for discharge of the additional condensate.

Connecting the Drain Line
The condensation drain line tube is used to remove excess condensation from the unit to a proper discharge location. It is important that the drain line tube is properly connected.

Drain Recommendations
It is recommended that the line connected to the 6 mm clear plastic line is a rigid drain line. The line should be sloped towards the discharge location to help with the removal of water. A T-fitting with a cap is recommended towards the connection point of the two lines to help with cleaning out the line when needed.

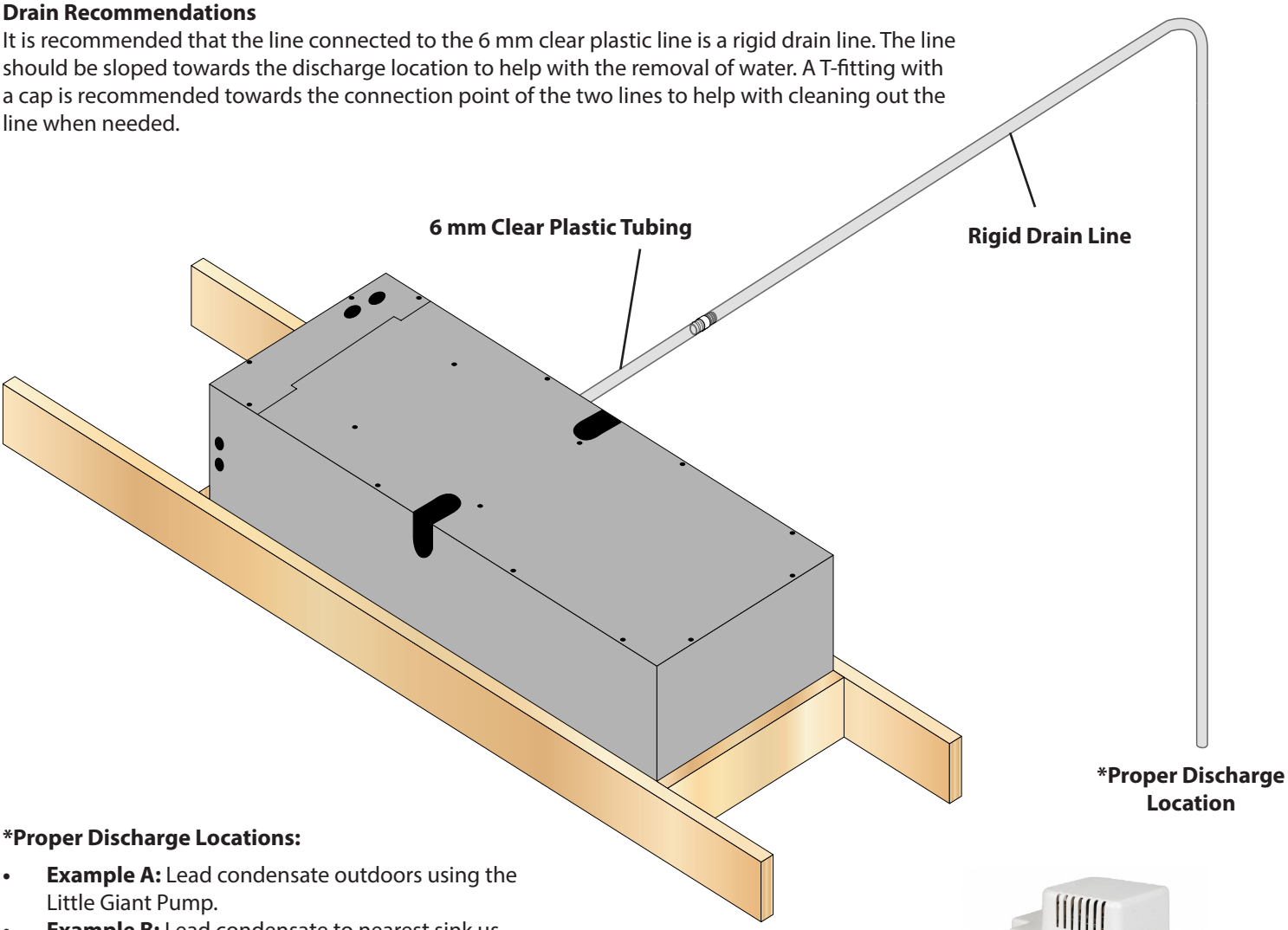

***Proper Discharge Locations:**

- **Example A:** Lead condensate outdoors using the Little Giant Pump.
- **Example B:** Lead condensate to nearest sink using the Little Giant Pump. Tie into your sink drain using a pipe wye.
- **Example C:** Lead condensate to a floor drain in an adjacent mechanical room/garage using the Little Giant Pump.

Little Giant Condensate Pump Kit (Available at WhisperKOOL.com).

REMOTE DISPLAY: INSTALLATION AND CONFIGURATION*

Tools needed: 8 mm drill bit, 5 mm drill bit, plaster saw, level, pencil
What's included: Display panel, wall mount bracket, flush mount bracket, flush mount template

Display panel

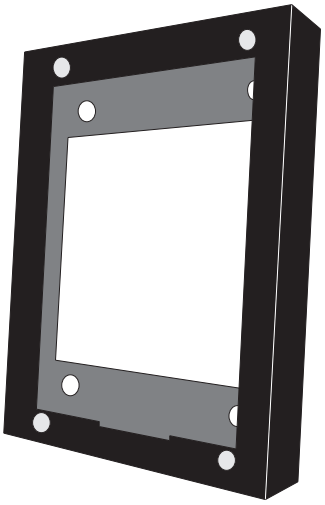

Wall mount bracket

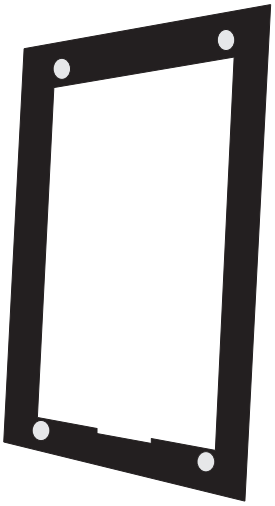

Flush mount bracket

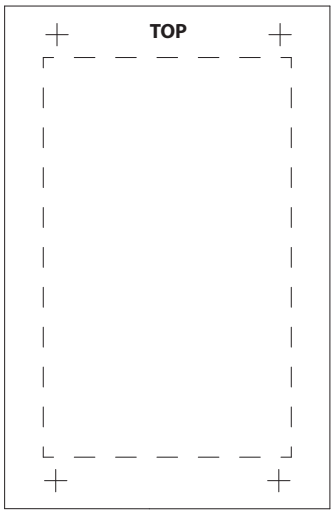

Flush mount template

Wall Mount Bracket Installation

1. Place the bracket on the wall. Use a level to ensure that the bracket is level. Using a pencil, mark the four screw holes in the rear of the bracket.

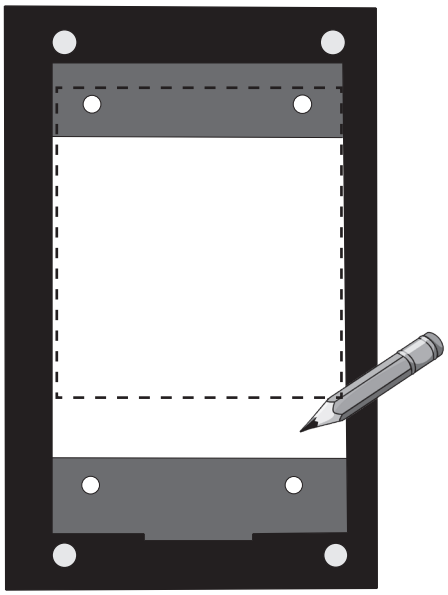

NOTE: Cut hole in the location shown for routing the display cable.

* The display can be mounted on any wall (inside or outside the wine cellar), up to 15 m from the cooling unit.

WALL MOUNT BRACKET INSTALLATION, CONTINUED

2. Using a drill with a 5 mm bit, drill four holes in the plaster for the screws. Insert the four (4) provided plaster anchors into the plaster, then tap them in with a hammer until they are flush with the wall.

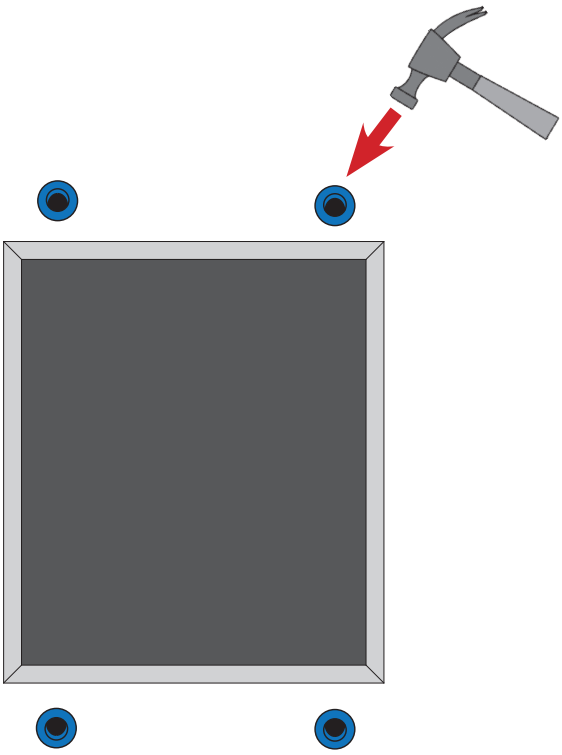

3. Place bracket against wall, aligning screw holes with plaster anchors. Insert the four supplied Phillips-head screws into the plasterl anchors. Tighten the screws to secure the bracket to the wall.

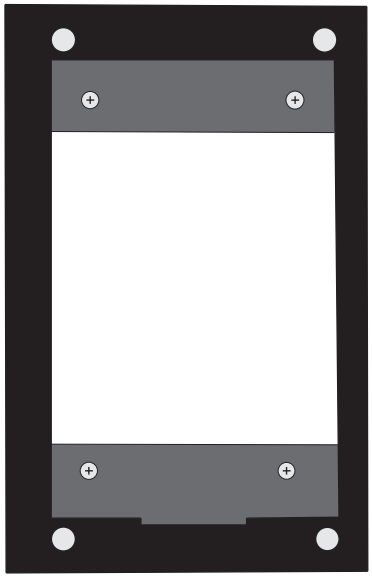

WALL MOUNT BRACKET INSTALLATION, CONTINUED

NOTE: Before you continue to Step 4, locate the area where the display will be mounted. You may route the display wire into the housing one of three ways: either through the wall or through one of the holes on the top or bottom edges of the wall mount bracket. If you'd like to route the display cable through one of these holes, place a rubber grommet into the hole and then route the display cable through the grommet and into the wall mount bracket.

4. Connect the end of the display cable labeled "DISPLAY" to the JST connector on the back of the display.

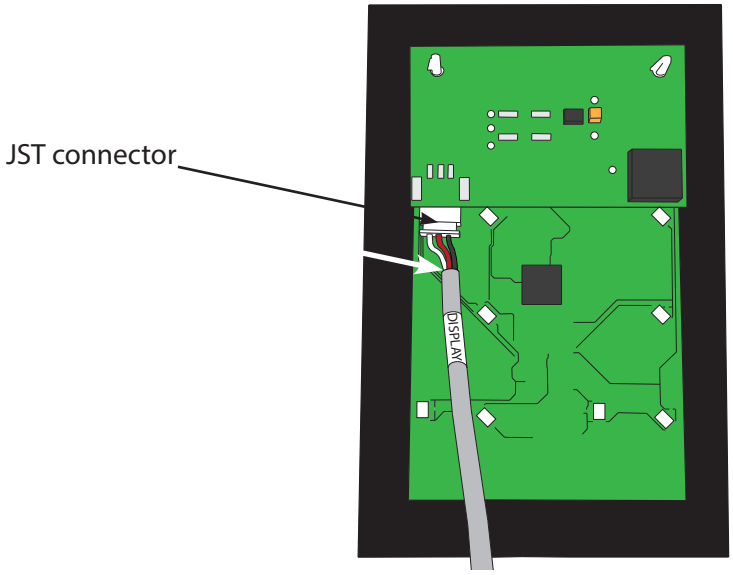

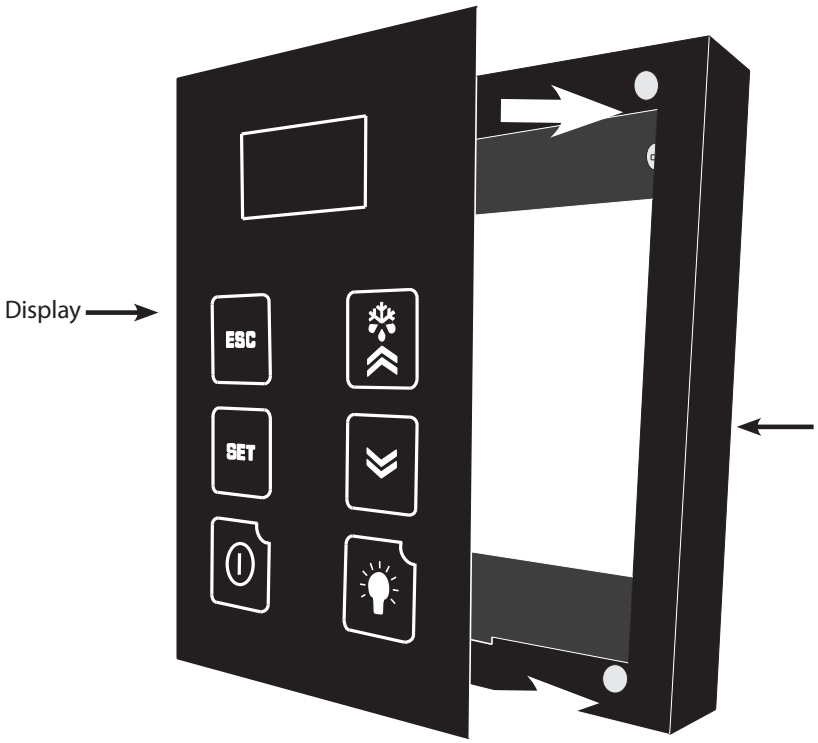

5. Place the display on the wall mount bracket as shown, attaching the back of the display panel to the magnets on the mounting bracket. Make sure that the alignment tab on the back of the display panel sits in the notch on the bottom of the bracket.

FLUSH MOUNT BRACKET INSTALLATION

Flush Mount Bracket Installation

1. Square the flush mount template on the wall using a level. Then draw a 76 mm line along the bottom edge of the template.

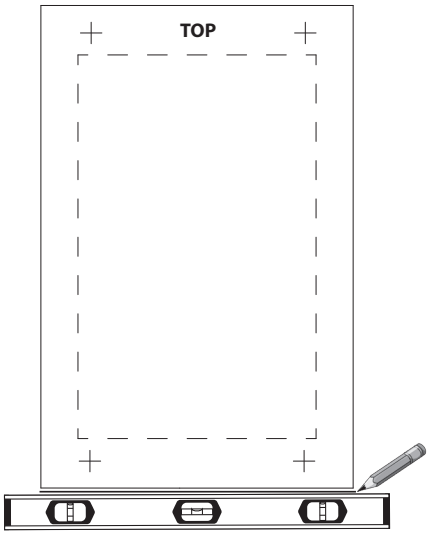

2. Peel the backing off the template and stick it to the wall, aligning the bottom edge with the line drawn in Step 1.

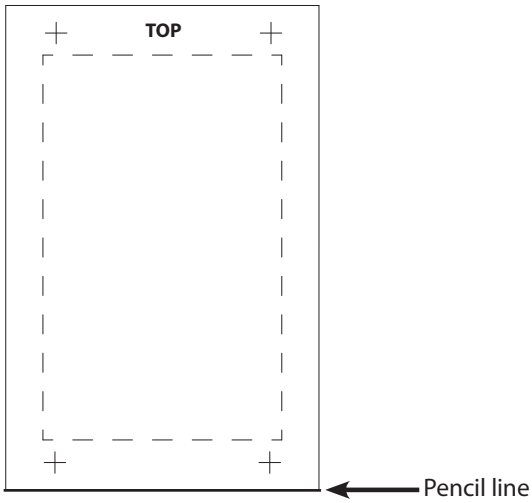

3. Use a 8 mm drill bit to drill a hole in the center of each cross (+).

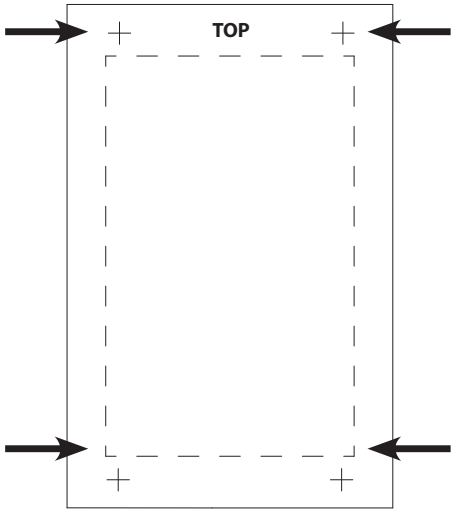

4. Cut along the perforated lines. When finished, remove template from wall.

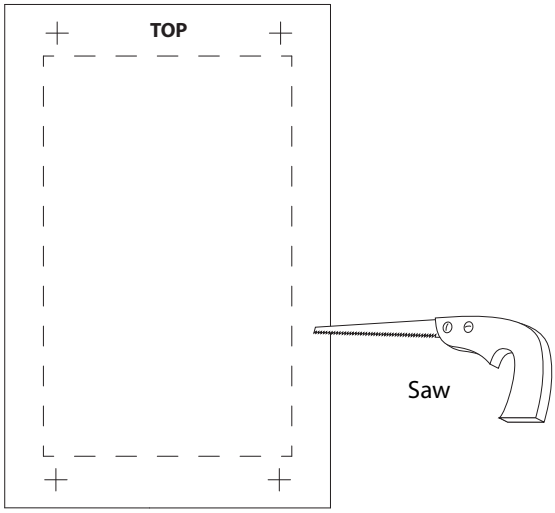

FLUSH MOUNT BRACKET INSTALLATION, CONTINUED

5. Remove the backing from the double-sided tape on the flush mount bracket.

6. Align magnets with previously drilled holes. Make sure the cut-out portion of the bracket (circled below) is on the bottom. Press the bracket firmly against the wall.

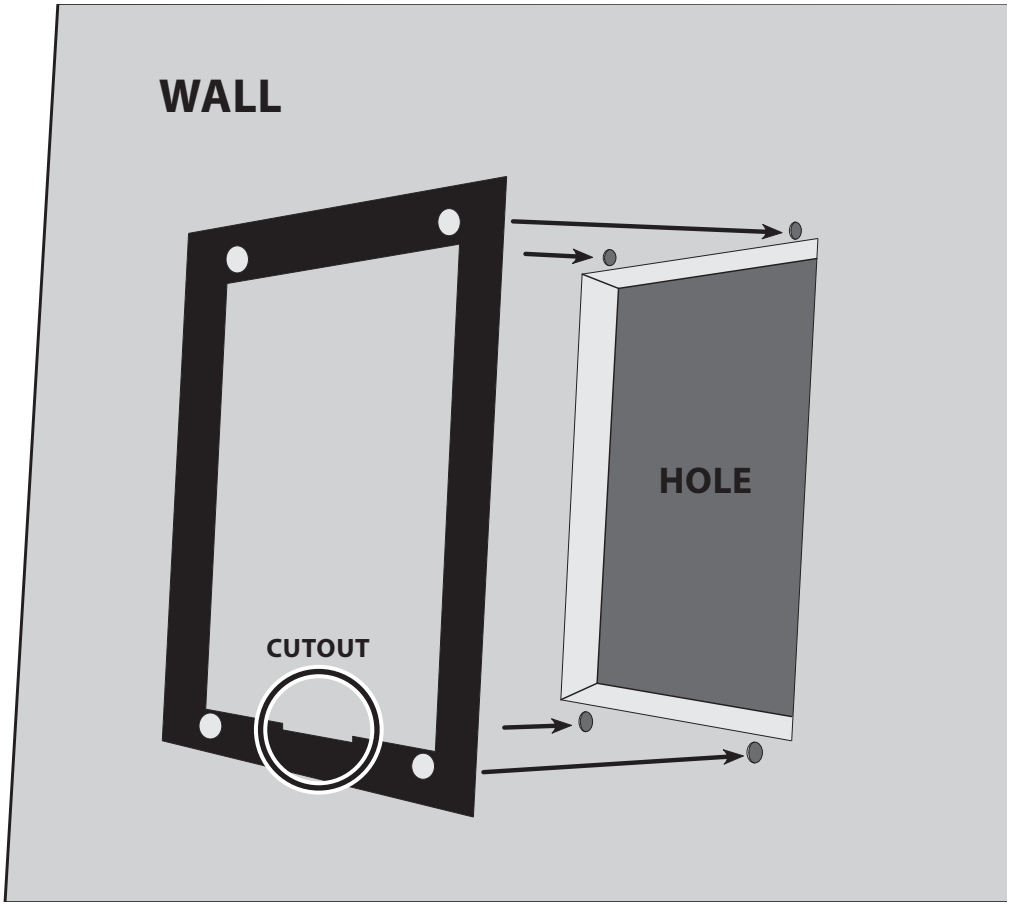

FLUSH MOUNT BRACKET INSTALLATION, CONTINUED

7. Connect the end of the display cable to the JST connector on the display panel.

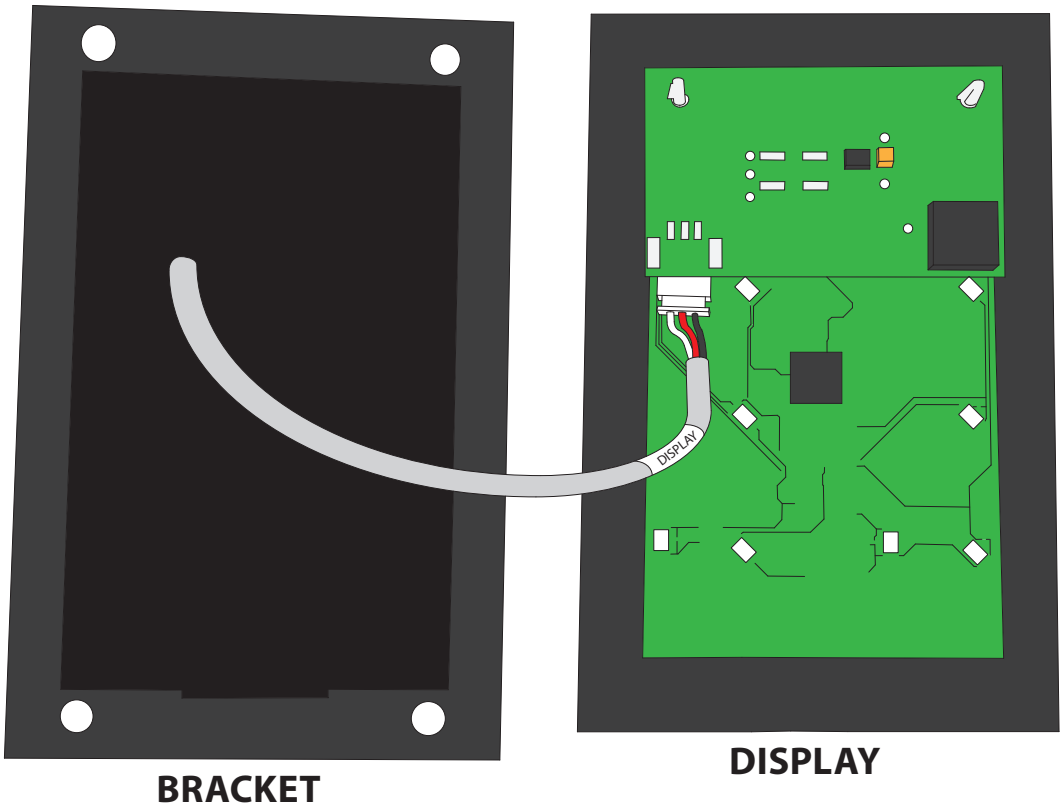

8. Place the display on the flush mount bracket as shown, attaching the back of the display panel to the magnets on the mounting bracket. Make sure that the alignment tab on the back of the display panel sits in the notch on the bottom of the bracket.

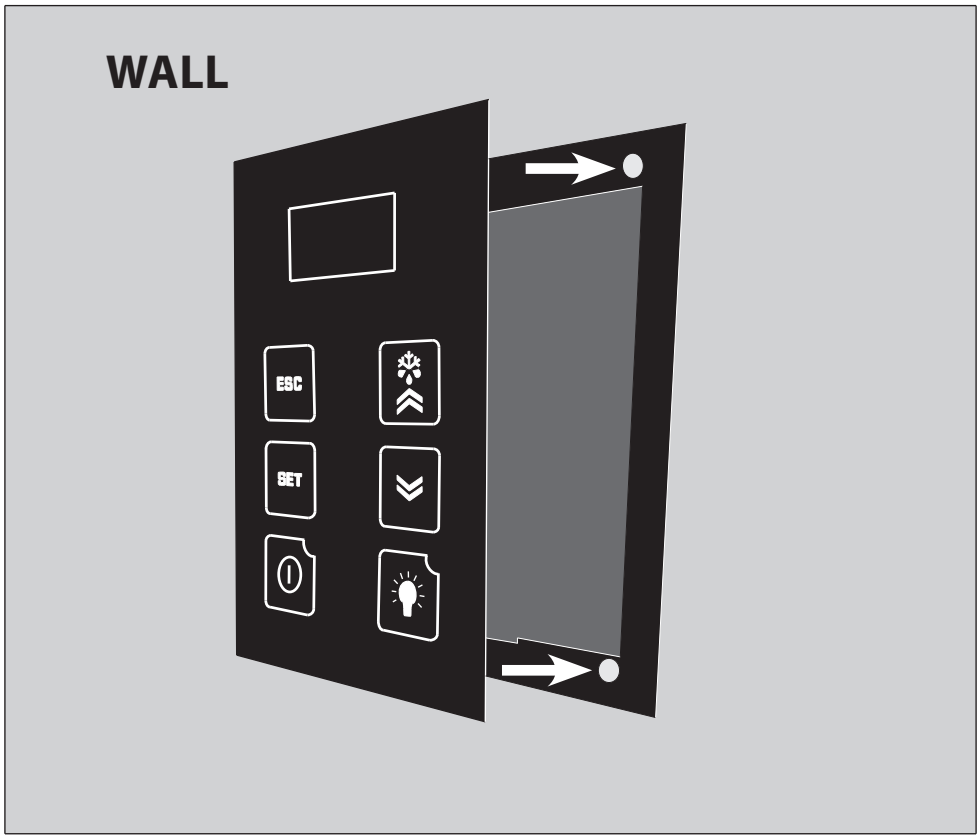

CEILING MOUNT WIRING DIAGRAM (KDT)

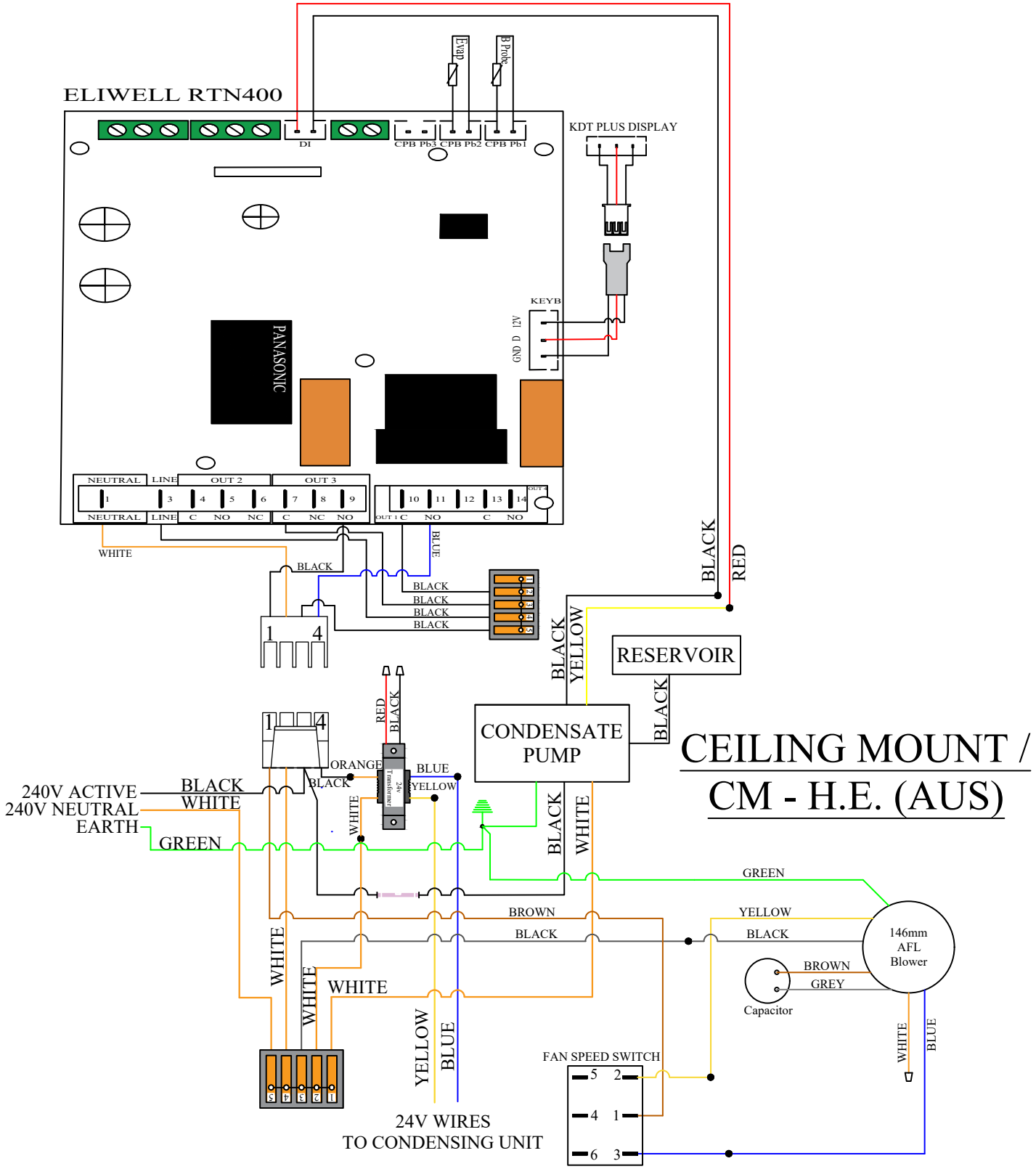

CONDENSING UNIT WIRING DIAGRAM

Cassette 220V H.E. Schematic Version

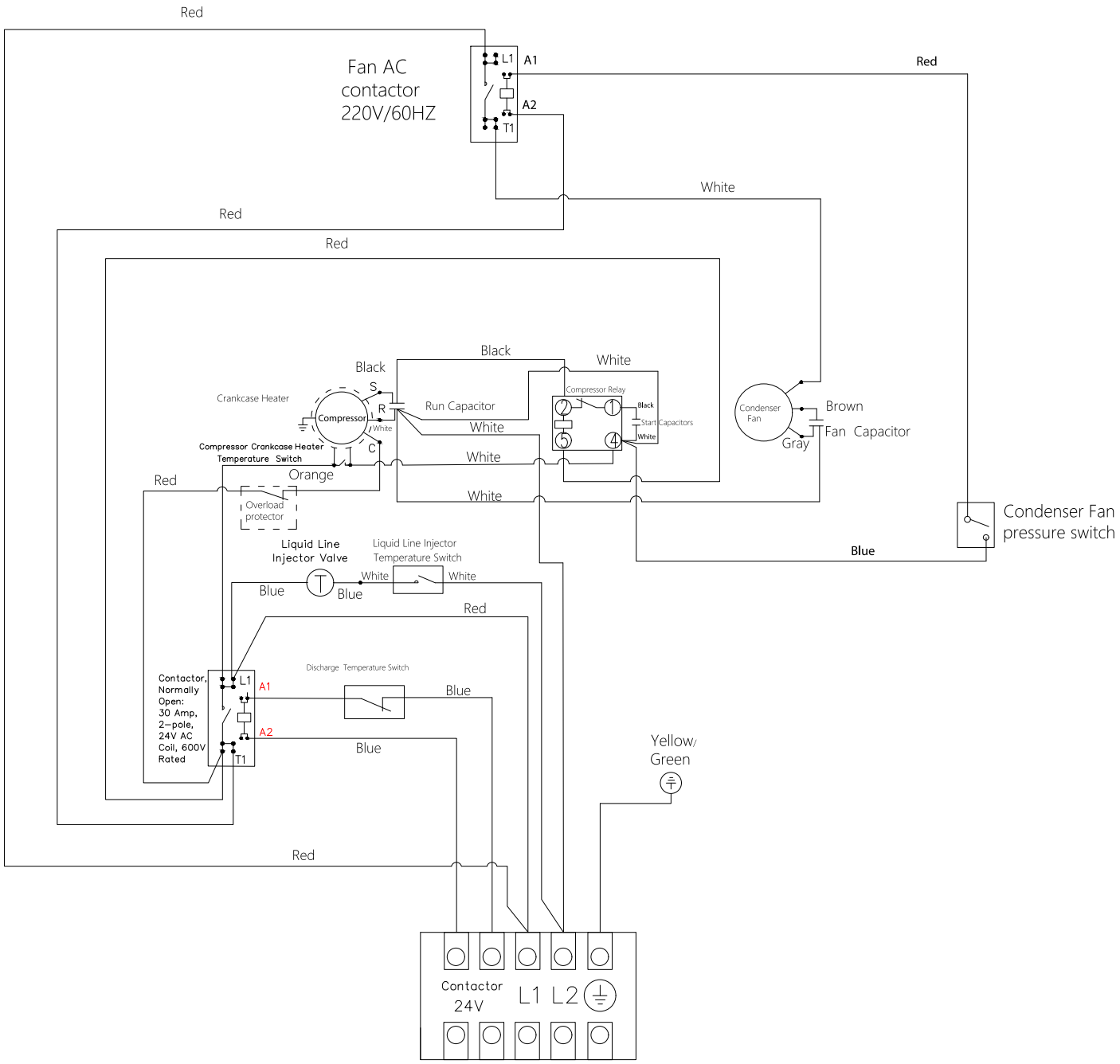

NOTE: For countries such as Australia (AU), L1 = Active, L2 = Neutral, Ground = Earth.

LINE SET PIPING DIAGRAMS

These are two suggested examples for running the line set from the coil to the condensing unit. Example 1 is specifically applicable when the system is installed with the condensing unit below or leveled to the coil. Example 2 is applicable when the system is installed with the condensing unit at a higher elevation than the coil.

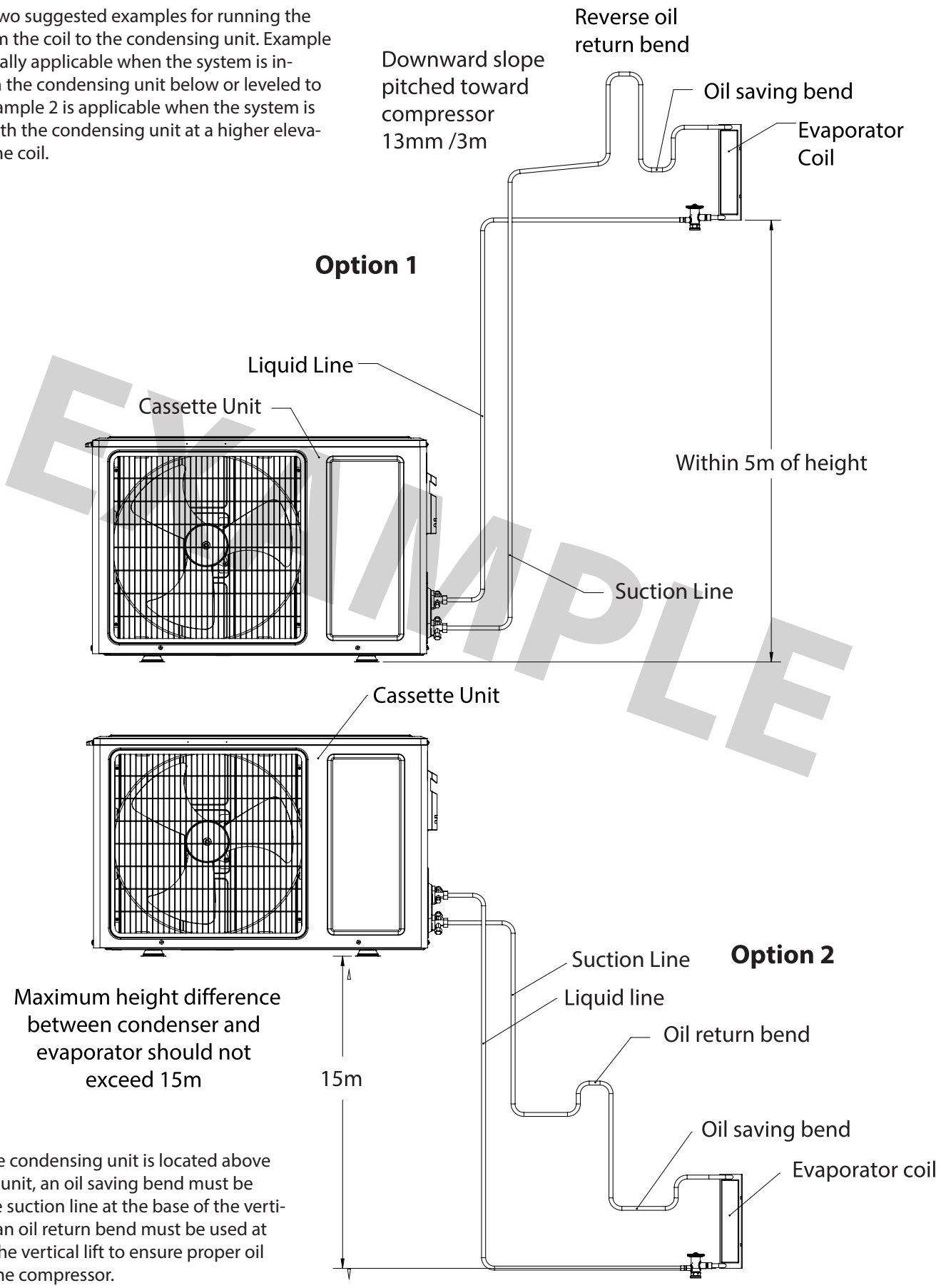

NOTE: If the condensing unit is located above the fan coil unit, an oil saving bend must be used on the suction line at the base of the vertical lift and an oil return bend must be used at the top of the vertical lift to ensure proper oil return for the compressor.

PREPARING THE CONDENSING UNIT

Electrical Needs

The unit requires a dedicated **240V, 15-amp circuit**.
The unit draws a large inrush current for about 1 second when the compressor starts. With a dedicated circuit and circuit breaker, the condensing unit will have sufficient power for effective operation.

- Ensure the voltage supplied matches the rating specified on the unit spec label.
- Provide an appropriate outlet for the evaporator unit.
- Provide a dedicated circuit and circuit breaker for the condensing unit.
- Provide a weatherproof disconnect for the condensing unit if it is located outside.

Power surges and spikes can damage sensitive electrical equipment. WhisperKOOL recommends plugging the unit into a surge protector or power conditioner in order to protect your system. As outlined in our terms and conditions, power surges and spikes are not covered under warranty.

In case the system should lose power, check the home/main circuit breaker. If the system does not respond properly, refer to the Troubleshooting Guide on page 47.

In case the system should lose power, check the home/main circuit breaker. If the system does not respond properly, refer to the Troubleshooting Guide.

Communication Cable Operation

WhisperKOOL's split systems operate like traditional air conditioners where there is wiring between the condensing unit and the evaporator unit.

WhisperKOOL Cassette Condensing Unit systems do not utilize a solenoid valve or low-pressure switch, which allows the system to run like a residential HVAC system. A 24V communication cable must be ran between the condensing unit and the evaporator unit. When the thermostat calls for cooling, a 24V signal is sent from the evaporator air handler unit to the contactor located on the outdoor cassette condensing unit via the 24V communication cable. Once the contactor is energized, power is then delivered to the compressor and the system beings to operate.

When the cellar reaches the desired temperature and the thermostat is satisfied, the contactor is de-energized, and the compressor shuts off.

CONDENSING UNIT WIRING

1. Locate or install an electrical disconnect box near the outdoor condensing unit per electrical code.
2. Remove electrical cover plate from unit.
3. Connect wiring for: 24V contactor (communication cable), L1, L2, and Ground as identified by terminal block label.
4. Leave the circuit breaker off or remove disconnect until unit is ready to charge.

NOTE: For countries such as Australia (AU), L1 = Active, L2 = Neutral, Ground = Earth.

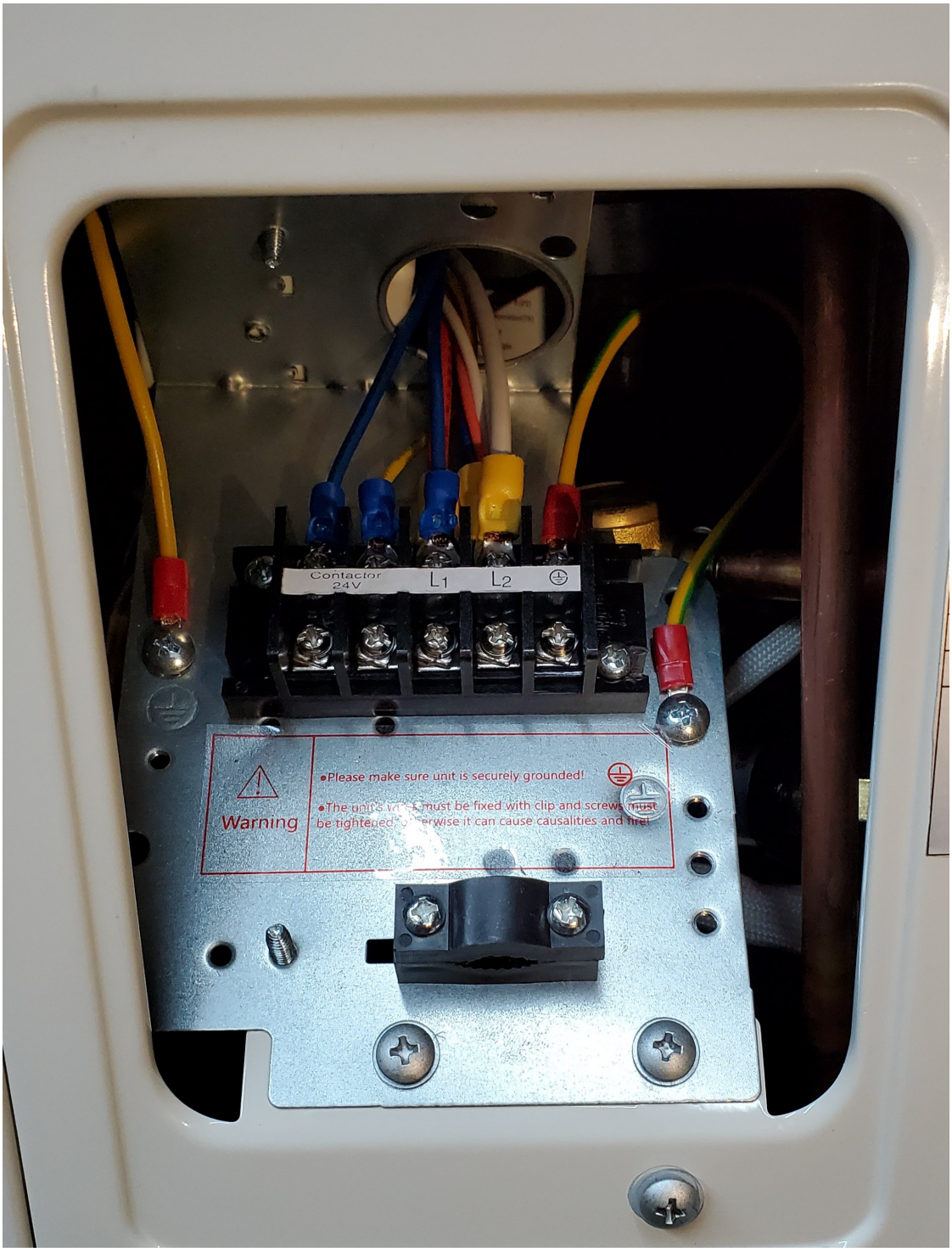

INSTALLING THE CONDENSING UNIT

1. Select installation location

Before installing the outdoor unit, you must choose an appropriate location. The following are standards that will help you choose an appropriate location for the unit.

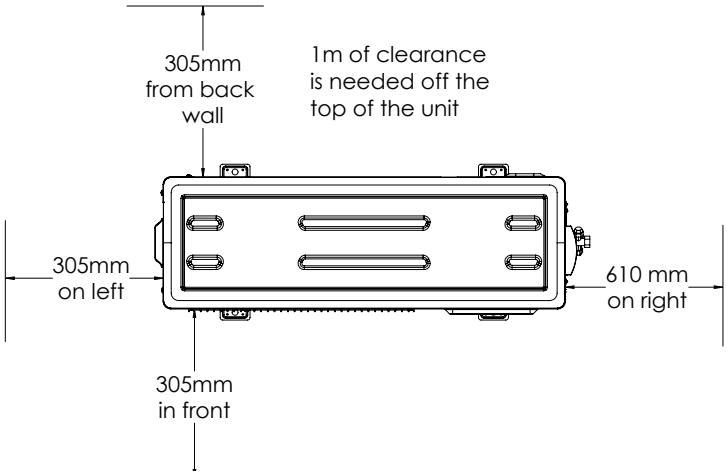

Proper installation locations meet the following standards:

- Meets all suggested spatial requirements according to diagram.
- Good air circulation and ventilation.
- Firm and solid—the location can support the unit, is level, and will not vibrate.
- Condensing unit is suggested to be mounted on concrete pad. Wall mounting is optional but can cause excess vibration.

DO NOT install unit in the following locations:

- Near an obstacle that will block air inlets and outlets.
- Near a public street, crowded areas, or where noise from the unit will disturb others.
- Near animals or plants that will be harmed by hot air discharge.
- Near any source of combustible gas.
- In a location that is exposed to large amounts of dust.
- In a location exposed to a excessive amounts of salty air.
- In a closet or small room.

Special Considerations For Cold Weather And Other Outdoor Conditions

If the unit is exposed to heavy wind: Install unit so that air outlet fan is at a 90° angle to the direction of the wind. If needed, build a barrier in front of the unit to protect it from extremely heavy winds.

If the unit is frequently exposed to heavy rain or snow: Build a shelter above the unit to protect it from the rain or snow. Be careful not to obstruct air flow around the unit. The unit should be elevated to prevent build up of debris and snow in front of fan.

2. Anchor outdoor unit

The outdoor unit can be anchored to the ground or to a wall-mounted bracket.

Unit Mounting Dimensions:
The following is a list of different outdoor unit sizes and the distance between their mounting feet. Prepare the installation base of the unit according to the dimensions.

3. Connect signal and power cables

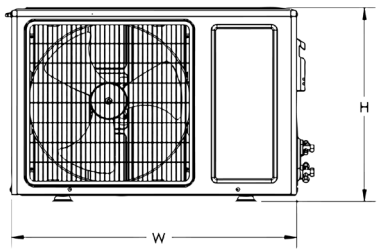

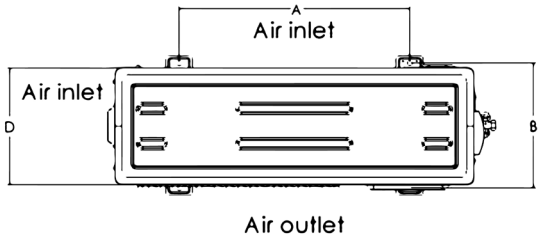

INSTALLING THE CONDENSING UNIT, CONTINUED

Outdoor Unit Dimensions (mm)	Mounting Dimensions	
	Distance A (mm)	Distance B (mm)
792 mm L x 273 mm D x 538 mm H	501 mm	272 mm

If you will install the unit on the ground or on a concrete mounting platform, do the following:

1. Mark the positions for four expansion bolt based on dimensions in the Unit Mounting Dimensions chart.
2. Pre-drill holes for expansion bolts.
3. Clean concrete dust away from holes.
4. Place a nut on the end of each expansion bolt.
5. Hammer expansion bolts into the pre-drilled holes.
6. Remove the nuts from expansion bolts, and place outdoor unit on bolts.
7. Put washer on each expansion bolt, then replace the nuts.
8. Using a wrench, tighten each nut until snug.

If you will install the unit on a wall-mounted bracket , do the following:

1. Mark the position of bracket holes based on dimensions in the Unit Mounting Dimension chart.
2. Pre-drill the holes for the expansion bolts.
3. Clean dust and debris away from holes.
4. Place a washer and nut on the end of eachexpansion bolt.
5. Thread expansion bolts through holes in mounting brackets, put mounting brackets in position, and hammer expansion bolts into the wall.
6. Check that the mounting brackets are level.
7. Carefully lift unit and place its mounting feet on brackets.
8. Bolt the unit firmly to the brackets.

The outside unit's terminal block is protected by an electrical wiring cover on the side of the unit. Remove the cover and wire according to diagram above and visual instructions below.

4. Connect line set to condensing unit

Line set piping size is determined by the unit size and the line set length. Determine the length before selecting the size. For the vertical rise on the suction and liquid lines refer to the line set piping examples previously shown. When the condensing unit is mounted above the evaporator unit it is recommeded that the suction line should have oil saving bends placed every 4.5 m.

1. Using a crescent wrench, grip the body of the valve. Do not grip the nut that seals the service valve.
2. While firmly gripping the body of the valves, use a torque wrench to tighten the flare nut according to the correct torque values.

TORQUE REQUIREMENTS

Outer Diameter of Pipe (mm)	Tightening Torque (kg/m)
6 mm	16.37 kg/m
10 mm	27.38 kg/m
13 mm	38.39 kg/m
16 mm	49.39 kg/m
19 mm	71.34 kg/m

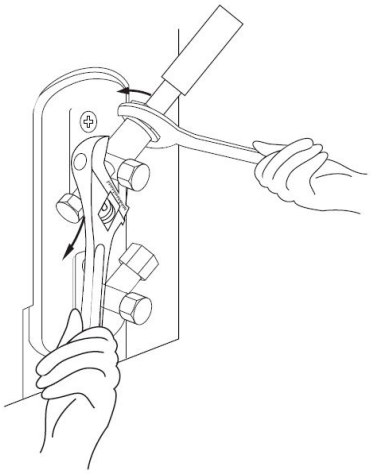

INSTALLING THE CONDENSING UNIT, CONTINUED

3. Loosen the flaring nut slightly, then tighter again.
4. Repeat steps for the remaining pipe.

LINE SET PIPING SIZE

Ceiling Mount H.E.	Line Set Length	<8 m	8 m - 15 m	15 m - 30 m
Suction Line	Horizontal Tubing	13 mm		16 mm
	Veritcal Rise	13 mm		
Liquid Line	Horizontal Tubing	6 mm		
	Vertical Rise	6 mm		

5. Pressure Test

After the line set has been connected securely to the evaporator and condensing unit, remove valve stem caps from low-pressure (suction) and high-pressure (liquid) valves on condensing unit. Ensure service valve stems are in the back-seated position. If valve cores have been removed, they should be reinstalled in valves after pressure testing, vacuum, and charging procedures are complete.

Connect charge hoses of the manifold gauge to the service ports on the outdoor unit's low pressure and high pressure valves. Leave gauge manifold knobs in closed position until nitrogen is ready to be admitted into the system. Connect service hose from service port on manifold to nitrogen regulator. Set nitrogen tank regulator to approximately 225 psi. Open both high side and low side gauge manifold knobs SLOWLY at the same time to admit nitrogen into the system until the gauge manifold reads 225 psi, then close gauge manifold knobs. Let pressure stand for minimum of 10 minutes. Use soapy solution to check flare connection points for leaks. If no leaks are present and pressure is maintained after 10 minutes of pressure test, proceed with evacuation process. If any leak is detected, it must be corrected before moving onto the evacuation process.

6. Air Evacuation/ Vacuum

1. Remove the nitrogen from the system
2. Remove the nitrogen tank from the manifold and attach the manifold to the vacuum pump
3. Install service caps on the valves.
4. After confirming that there is fresh oil in the vacuum pump, connect the hose from the manifold to the pump.
5. Start the pump and run it until micron gauge reads 250 microns or less.
6. Once vacuum of 250 microns or less is achieved, disconnect the vacuum pump from the system.
7. Remove the micron gauge from the access valve.
8. Close the valves on the manifold.

NOTE: For adjusting the service valves on the condensing unit a 5 mm allen wrench is needed.

Liquid Line Service Valve

This location is used to charge the system with liquid refrigerant and identify the high side pressure of the system.

Calculating Subcooling

To determine the subcooling of the system, calculate the difference between the high side pressure of the system (converted to temperature) and the temperature of the liquid line. The temperature of the liquid line will be taken on the exterior of the condensing unit, about 102 mm away from the housing. *Saturation temp — liquid line temp.

3°-8°C SUBCOOLING REQUIRED FOR WARRANTY APPROVAL

INSTALLING THE CONDENSING UNIT, CONTINUED

7. Charging

The chart below provides the approximate refrigerant charge amount for initial startup based on the line set length. Please see the chart below for the initial charge amount. The installing technician may still need to add additional charge and dial in the desired subcooling to achieve optimum performance.

Subcooling range is between 3° to 8°C:

- When charging during colder ambient temperatures (below 16°C), your target will be the lower end of the subcooling range.
- When charging during hotter ambient temperatures (above 35°C), the target will be the upper end of the subcooling range.

1. Invert refrigerant tank on a scale. Purge the charging hose up to the manifold and then zero out the scale in preparation for liquid refrigerant charging.
2. With the power off to the condensing unit, admit liquid refrigerant through the liquid line service valve.
3. Prior to turning on condensing unit, ensure evaporator (air handler) unit is ON and controller is calling for cooling.
4. Turn on the circuit breaker for the condensing unit. The compressor and condenser fan should begin to operate.
5. After startup, wait a minimum of 10 minutes for system to stabilize before checking subcooling or superheat.
6. Place refrigerant tank in upright position in preparation for adding vapor refrigerant (if necessary).
7. Add refrigerant (in vapor form) to the low side of the system through the suction line service port if necessary to achieve recommended subcooling.
8. Check the superheat at suction service valve on the condensing unit.
9. Adjust the TXV until the superheat is between 5° to 14°C at the service valve.
10. After recommended superheat and subcooling is achieved, place the service valve stems in the back-seat position (all the way out counter-clockwise) and reinstall the Schrader valve cores. Once hoses are disnected, reinstall all caps on service valves.

APPROXIMATE INITIAL CHARGE CHART

Line Set	Charge Total
3 m Line Set	1.91 kg
6 m Line Set	1.99 kg
9 m Line Set	2.06 kg
12 m Line Set	2.13 kg
15 m Line Set	2.20 kg
18 m Line Set	2.28 kg
21 m Line Set	2.35 kg
24 m Line Set	2.42 kg
27 m Line Set	2.49 kg
30 m Line Set	2.57 kg

INSTALLING THE CONDENSING UNIT, CONTINUED

Finalizing the Installation

- Confirm the entire suction line from the evaporator unit to the condensing unit is insulated using cellular insulation or equivalent. Seal all seams with Armaflex 520 Foam Insulation Adhesive or equivalent.
- Confirm that the control is displaying the correct temperature and that no alarms are present.

APPROXIMATE OPERATING PRESSURES (CELLAR TEMPERATURE 14°C)

Temp.	Low Side	High Side
16°C	23-27 PSIG	82-87 PSIG
24°C	25-29 PSIG	105-110 PSIG
30°C	26-30 PSIG	135-140 PSIG
35°C	27-31 PSIG	152-157 PSIG

TXV ADJUSTMENT

The TXV is shipped from the factory preset for 15 m. A TXV adjustment may be necessary based on the ambient temperatures in the cellar and at the condensing unit.

Danfoss TXV Adjustment

Most units are equipped with a Danfoss adjustable TXV.

- Adjust the TXV until the total superheat measured at the suction (vapor/low pressure) line service valve is 5° to 14°C. With the power off to the condensing unit, admit liquid refrigerant through the liquid line service valve.

To adjust the TXV use a 4 mm hex key to remove the cap from the TXV superheat adjustment port. (Figure 1)

1. With the cap removed, insert the hex key into the superheat adjustment port.
2. Increase superheat by turning clockwise.
3. Decrease superheat by turning counter-clockwise.

FIGURE 1

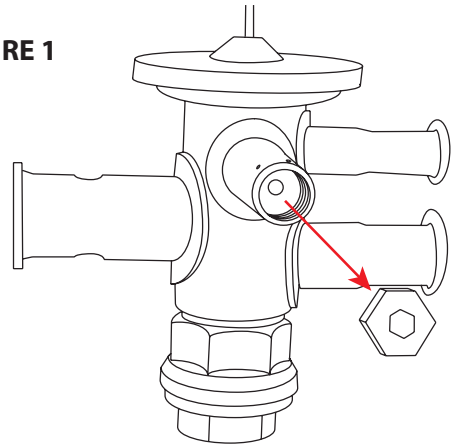

TXV ADJUSTMENT, CONTINUED

Sporlan TXV Adjustment

Some units are equipped with a Sporlan adjustable TXV.

Adjustment Steps:

1. Remove the seal cap using two wrenches. (Figure 2)
    i. Use a 22 mm wrench on the BOTTOM cap.
    ii. Use a 19 mm wrench on the TOP (seal) cap.
2. With the cap seal removed. (Figure 3)
    i. Use a 5 mm service wrench to tighten or loosen the service stem located under the seal cap.
    ii. When the adjustment is completed, replace the seal cap.

FIGURE 2

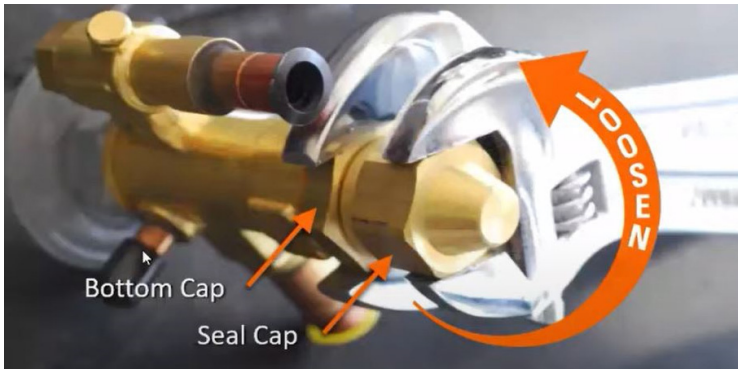

FIGURE 3

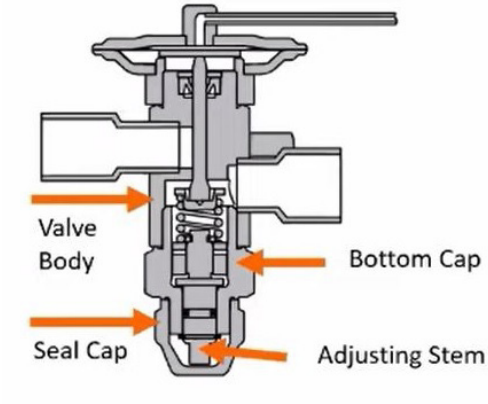

QUICK REFERENCE GUIDE

Display Layout

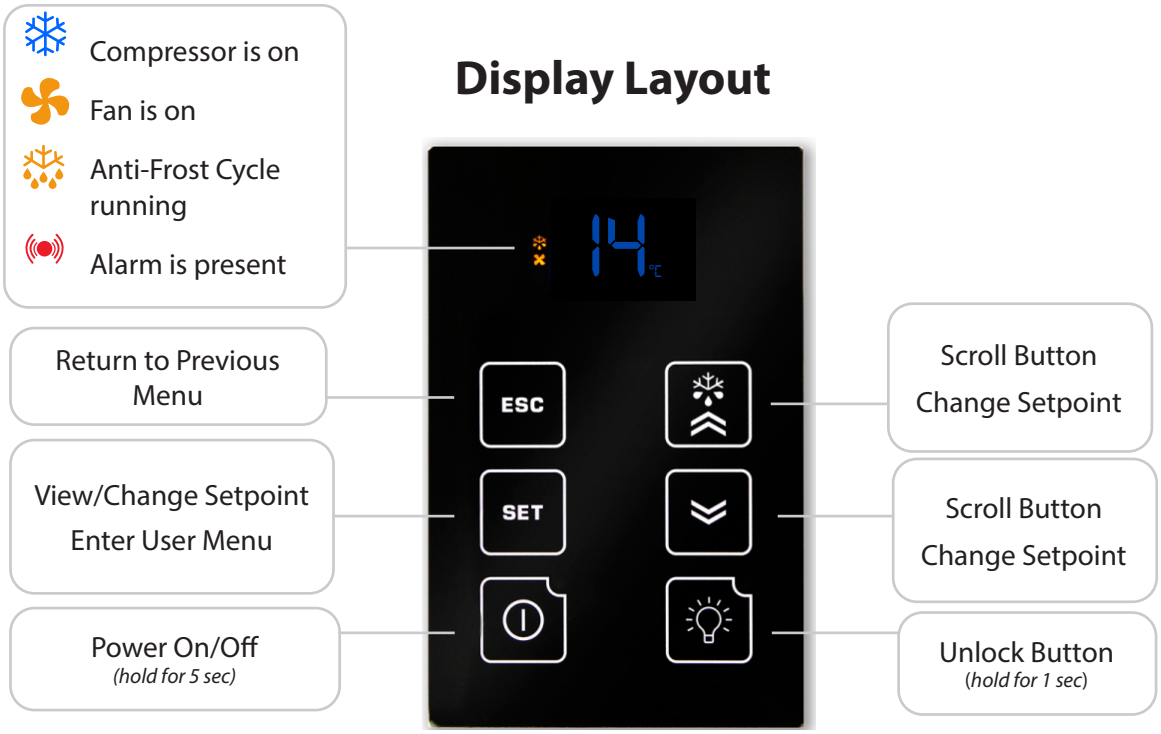

CEILING MOUNT 4000 SPECIFICATIONS

Model	Ceiling Mount Evaporator (Fan Coil Unit)	H.E. Condenser (Air-Cooled Condensing Unit)
Cellar Size	Approx. 85 cu. m. when cellar is fully insulated and sealed with a proper vapor barrier.*	
Watts w/15.5°C air entering condenser coil	Med: 1313 / 1464 • High: 1436 / 1641	H.E. Condenser (Air-Cooled Condensing Unit)
Watts w/23.8°C air entering condenser coil	Med: 1281 / 1426 • High: 1402 / 1594	
Watts w/29.4°C air entering condenser coil	Med: 1249 /1388 • High: 1333 / 1443	
Dimensions	908mm L x 358mm W x 321mm H	792mm L x 273mm W x 538mm H
Refrigerant	R-134a	
Condensing Unit HP	0.6 HP	
Voltage Rating	240V 50 Hz (15-amp dedicated circuit required)	240V (15-amp dedicated circuit required)
Weight (kgs)	29.9	25
Amps	0.6 (Running Amps)	LRA 10.7, RLA 2.7, FLA 3.1
Line Set	Liquid line 6 mm OD; Suction line 13 mm OD (less than 15m), 16 mm (greater than 15m)	
Drain Line	6 mm ID clear plastic tubing (not provided) - Rigid tube recommended	
Installation	Evaporator unit is installed in the cellar. Condensing unit can be installed up to 30 line meters from evaporator unit.	
Thermostat	KDT digital display (15m cable), liquid-temperature-measuring bottle probe (15m cable), 24V - customer supplied	
Temp. Delta	Can maintain a 14°C cellar temperature with up to 49°C condenser air intake temperature.	
Warranty	Two-year limited warranty (parts and labor).	

CEILING MOUNT 8000 SPECIFICATIONS

Model	Ceiling Mount Evaporator (Fan Coil Unit)	H.E. Condenser (Air-Cooled Condensing Unit)
Cellar Size	Approx. 85 cu. m. when cellar is fully insulated and sealed with a proper vapor barrier.*	
Watts w/15.5°C air entering condenser coil	Med: 1565 / 1864 • High: 1614 / 1923	H.E. Condenser (Air-Cooled Condensing Unit)
Watts w/23.8°C air entering condenser coil	Med: 1399 / 1631 • High: 1426 /1724	
Watts w/29.4°C air entering condenser coil	Med: 1301 / 1505 • High: 1365 / 1592	
Dimensions	908mm L x 368mm W x 324mm H	792mm L x 273mm W x 538mm H
Refrigerant	R-134a	
Condensing Unit HP	0.7HP	
Voltage Rating	240V 50 Hz (15-amp dedicated circuit required)	240V (15-amp dedicated circuit required)
Weight (kgs)	29.9	25.4
Amps	0.6 (Running Amps)	LRA 13.2, RLA 3.19, FLA 3.66
Line Set	Liquid line 6 mm OD; Suction line 13 mm OD (less than 15m), 16 mm (greater than 15m)	
Drain Line	6 mm ID clear plastic tubing (not provided) - Rigid tube recommended	
Installation	Evaporator unit is installed in the cellar. Condensing unit can be installed up to 30 line meters from evaporator unit.	
Thermostat	KDT digital display (15m cable), liquid-temperature-measuring bottle probe (15m cable), 24V - customer supplied	
Temp. Delta	Can maintain a 14°C cellar temperature with up to 49°C condenser air intake temperature.	
Warranty	Two-year limited warranty (parts and labor).	

***Sizing the System to the Room**

There are several factors such as glass, stone, and concrete which will change the required amount of BTUs needed to properly cool your wine room. We strongly recommend utilizing the cellar wizard on the WhisperKOOL website in order to ensure you are selecting the proper cooling system for your application. Under-sizing your cooling system can lead to premature failure and/or prevent the system from reaching the desired set temperature.

FILTER

Washable filter is installed from the factory on the return side of the grille, secured via velcro strips.

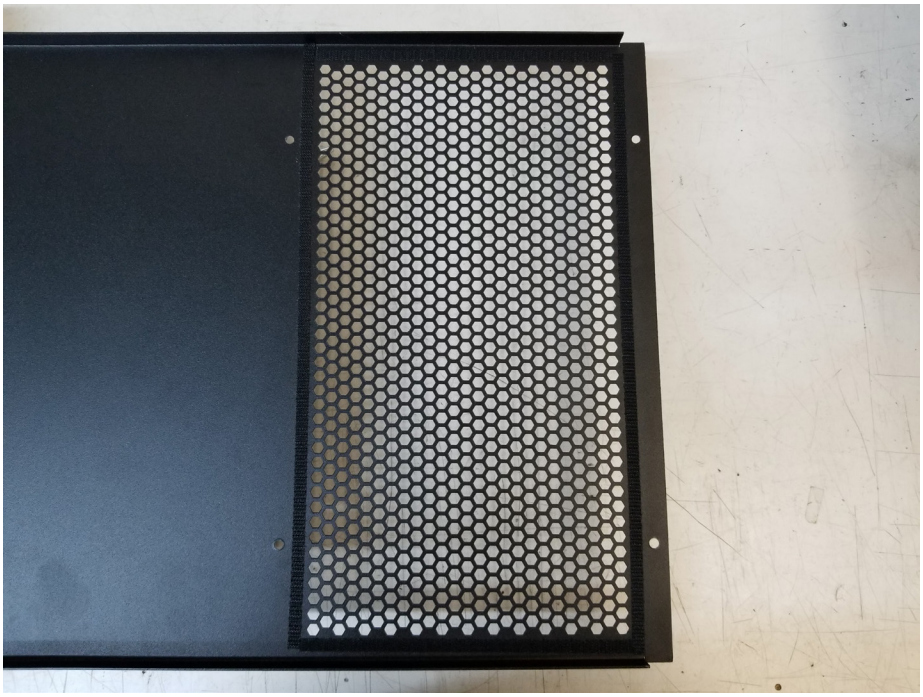

LINE SET, DRAIN TUBE, AND ELECTRICAL CONNECTIONS

- Line set, drain tube and electrical connections have been relocated to be accessible from the bottom (cellar side/grille side) located on return side of unit.
- Can be accessed by removing the grille.
- Flare fittings have been added to the line set.
- Liquid line – 6 mm flare fitting.
- Suction line – 13 mm flare fitting.
- Connect Flare nuts from line set to system using Crescent wrenches or torque wrench.
- Pressure test is mandatory after connecting line set to the unit.
  - Verify there are no leaks before beginning vacuum and charging process.

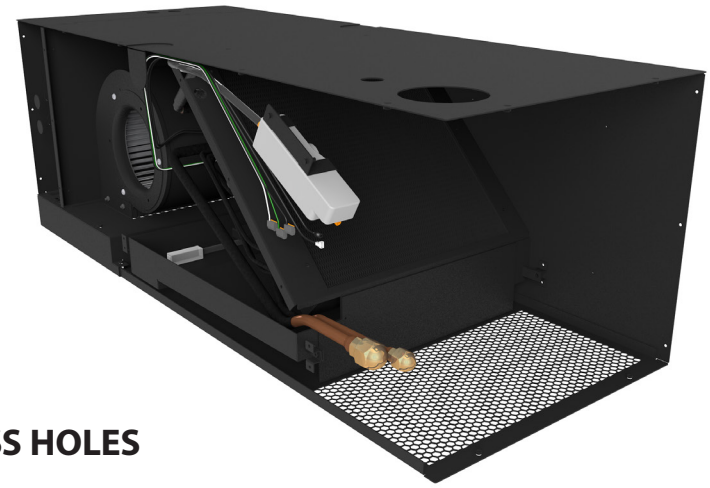

ADDITIONAL ACCESS HOLES

- Top access holes.
  - 1 large hole for line set.
  - 1 small hole for electrical.
  - Note: do not run electrical wiring through same hole as line set.
- Side access holes.
  - 1 large hole for line set.
  - 1 small hole for electrical.
  - Note: do not run electrical wiring through same hole as line set.
- Use the provided plug to cover the small hole not in use.
- Use the provided sticker (102 mm x 102 mm) to cover the large hole not in use.
- Use the provided strain relief clamp to route electrical wiring into unit.
- Seal around line set hole with cork tape, or other insulation to ensure proper seal.
- Note: side access holes will be applicable only if utilizing the flush mounting option.

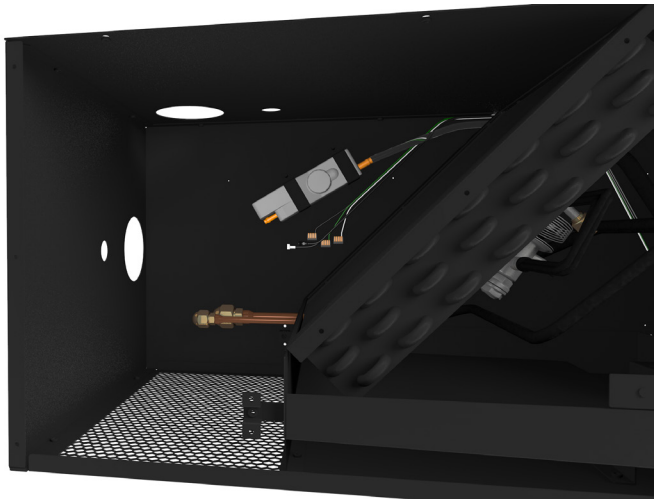

CONTROLLER FUNCTIONS

Button	Normal Functions
INITIAL STARTUP	When the unit is plugged in and power is sent to the controller, a beep will sound, confirming that the controller is getting power. All LEDs on the display will blink three times. Three dashes will then appear on the screen. All display LEDs will then blink three times. Once the controller has gone through the initial startup process, and all LEDs have cycled, the home screen will be displayed.
UNLOCKING THE DISPLAY	Press and hold any button for one second to unlock the display. (A white LED will appear in the top left corner of the button being pressed.) A beep will sound, signifying that the display is unlocked. **NOTE**: The display must be unlocked before any button functions become available.
ON/OFF	To turn the unit ON, press and hold the ON/OFF button until the red LED turns OFF. To turn the unit OFF, press and hold the ON/OFF button until the red LED turns ON.
UP/DOWN	The up and down arrows are used to navigate through menus and adjust parameters such as setpoint, Fon/FOF, etc.
SET	• To change the setpoint, press the SET button. When "SEt" is displayed on the screen, press the SET button once more. Use the UP and DOWN ARROW buttons in order to change the value until the desired setpoint is reached.
	• The SET button allows you to view the setpoint, evaporator temperature, bottle temperature, alarms, and the hidden menu. • Press the SET button once. "SEt" will be displayed. Press the UP or DOWN ARROW buttons to scroll through ALr, Pb1, or Pb2. **Set** — Setpoint **Alr** — Alarm folder **Pb1** — Liquid (bottle probe) temperature **Pb2** — Evaporator coil temperature • Press the SET button again to view any of these values.
	• Hold the SET button for approximately 5 seconds to enter the User Menu. (More information about the User Menu is available on page 45.) • Other parameters in the User Menu which are not available for adjustment include: idF, rEL, and LAn.
ESC	This button confirms changes made to parameters such as the setpoint and returns you to the previous menu.
LIGHT	The light function is not in use. However, this button can still be used to unlock the display.

ICON GLOSSARY

Icon	Meaning
SNOWFLAKE	**Blinking:** The unit is calling for cooling, but must wait five minutes before restarting the compressor. This five-minute delay serves as an Anti-Short Cycle for the compressor's protection. **Constant:** The unit is in cooling mode and the condensing unit is running.
DRIPPING SNOWFLAKE	The unit is undergoing an Anti-Frost Cycle. While the Anti-Frost Cycle is running, "dEF" will be displayed on the screen. See System Operation page for further details.
FAN	The evaporator fan is running.
ALARM	The alarm icon is shown when the unit encounters an issue that needs attention. Alarm codes are explained on the following page. All temperature-related alarms are blocked for the first 10 hours after the unit is plugged in to allow the system to stabilize and acclimate to the new environment.

WHISPERKOOL CONTROLLER ALARM CODES

Code	Cause	Solution
The following alarm codes will be displayed on the screen along with the alarm icon.		
E1	Bottle probe is not connected	Attach bottle probe to circular connector
	Faulty bottle probe connection	Locate faulty bottle probe connection by inspecting all wiring connections between the bottle probe and the circuit board. The two-pin connector for the bottle probe should be connected to the CPB/PB1 terminal on the circuit board. If it is not connected, plug it in. If a faulty connection has been identified, correct the issue or contact customer service for further assistance. **NOTE:** The E1 code will not appear in the alarms menu. It will be permanently displayed on the screen.
	Defective bottle probe	Replace the bottle probe
E2	Faulty evaporator probe connection	Locate faulty evaporator probe connection by inspecting evaporator probe wire. The two-pin connector for the evaporator probe should be connected to the CPB/PB2 terminal on the circuit board. If it is not connected, plug it in.
	Defective evaporator probe	Replace the evaporator probe
E7	No communication between keypad and circuit board for 60 seconds	Verify that the display cable is connected to the keypad and the circuit board and is not damaged, frayed, or kinked. If problem persists, contact Customer Service for troubleshooting information.
E10	Clock battery is dead	Replace battery **NOTE:** A dead clock battery will not affect the operation of your cooling unit.
The following alarm codes will not be displayed on the home screen. However, the alarm icon will be displayed in the event of an alarm. The alarms can be viewed in the Set Menu's ALr folder.		
EA	Unit is not draining properly	1. Check to see that the unit is level; if not, level it 2. Verify that the drain line is not clogged; if so, clear obstruction 3. Ensure that the condensate pump is operating 4. Verify wire connection at D.I. port of circuit board **NOTE**: If the drain line is obstructed or the pump fails for some reason, and the water level in the drip tray gets too high, the unit will not operate until the water in the internal drip tray drops back below the proper level. **NOTE**: If the unit loses power (due to a power outage or being manually unplugged), the condensate pump may need to be reset. To do this, disconnect and reconnect the black cables on the condensate pump.
AH1	The bottle probe is sensing a temperature that is 2°C above the setpoint	1. Allow time for the wine to reach the desired temperature 2. Ensure that the cellar is sealed properly 3. Verify that the bottle probe is calibrated correctly (refer to the User Menu on the following page) 4. Verify that the unit is sized correctly for the cellar
AL1	The bottle probe is sensing a temperature that is 2°C below the setpoint	1. Make sure the unit is not in cooling mode (the snowflake icon will not be illuminated) 2. Add heat to the room until the wine reaches the desired temp 3. Verify that the bottle probe is calibrated correctly (refer to the User Menu on the following page)
Ad2	The Anti-Frost Cycle ended on time-out	1. Check the evaporator coil for ice buildup. Unplug the unit and allow the coil to thaw before restarting. 2. Make sure the room to which the unit is exhausting is not below 60°F 3. If the unit repeatedly goes into Anti-Frost Cycles (one per minute), call Customer Service for more troubleshooting information

USER MENU

The User Menu is accessed by **pressing and holding the SET button for 3 seconds.** Use the UP and DOWN ARROW buttons to navigate to desired parameters. Press the SET button again to view these parameters. Press the UP and DOWN ARROW buttons to adjust a parameter.

The following parameters are available in the menu:

Parameter	Description
Fdc - humidity enhancement	This parameter is measured in minutes, and is preset at the factory to 1. An increase in this parameter will increase the humidity enhancement of your cellar. This parameter should not be adjusted to zero. Adjustments should be made in increments of 5, with a maximum of 15 and a minimum of 1. After making any adjustments to humidity enhancement, **you should wait a minimum of 3 days** before making any additional adjustments. This will allow sufficient time for the cellar to acclimate to the new setting.
CA1 - bottle probe (Pb1) calibration	**CA1 - bottle probe (Pb1) calibration:** You may use this parameter to calibrate the bottle probe to a known temperature. This parameter can be adjusted between -6°C to 6°C. For example, if the bottle probe temperature is 14°C, and the known temperature is 13°C, you can set the CA1 parameter to -1°C to match the known temperature.
PA2 - installer menu	This menu is only accessible using a password and is not available for adjustment.
dOA - digital input	This setting determines which of the unit's components will be activated or deactivated when a certain electrical relay is activated or deactivated in response to an alarm. The controller comes pre-programmed with a factory setting of 2. 2 = activates the compressor and fans 5 = disables the compressor and fans **NOTE:** Setting the dOA to any number other than 2 or 5 will prevent the unit from operating properly.

WHISPERKOOL TROUBLESHOOTING GUIDE

Unit has ice forming on the evaporator unit	
Possible cause	**Solution**
Evaporator filter or coil is dirty	Remove the filter and wash it, then clean the coil with a vacuum. If coil is very dirty, use a spray bottle with a small amount of liquid dish detergent or coil cleaner. Spray coil, let set for five minutes, then flush with fresh water.
There is something blocking the supply and/or return air	Remove blockage
The evaporator fan is not turning on	Call a service tech to troubleshoot
The evaporator unit has not gone through an Anti-Frost Cycle yet	Check the coil for surface ice. Melt with blow drier until coil is warm to the touch. Soak up water with a towel.
If evaporator unit continues to ice	Observe ice formation pattern. If only part way up the coil face, the system could be low on refrigerant. If all the way up, the coil may be dirty or airflow is blocked.

Unit does not run/power up	
Possible cause	**Solution**
Evaporator Unit is not plugged in	Make sure the unit is plugged into an outlet
Power switch not on	Turn unit on by pressing the power button on the control
Line voltage rating is incorrect for the system	Check line voltage to make sure there is 240V
Bottle at setpoint	Lower setpoint
Thermostat not calling for cooling	Lower setpoint
Faulty thermostat or wiring	Call Customer Service

Cellar temperature is too warm	
Possible cause	**Solution**
The temperature of the room to which the condensing unit exhausts exceeds 110°F	Intake temperature needs to drop below 43°C
The system is undersized for the cellar	Order correct size system
There is something blocking the supply and/or return air on the evaporator unit or the condensing unit	Remove air flow obstruction
Evaporator unit is mounted too low in the cellar	Relocate unit so the distance from the ceiling and top of the unit is no more than 457 mm
One or more of the fans is not turning on	Please contact the installing technician to troubleshoot
Compressor is not turning on	Please contact the installing technician to troubleshoot
Compressor keeps cycling on overload	Make sure all fans are working and there is no airflow obstruction
Poor seal around door or other areas requiring a seal (around the unit, wall joints, etc.)	Make sure there are no air gaps around the door. If door seal is damaged, replace it.
Setpoint too high	Lower the setpoint
Evaporator coil is frosted or iced up	Observe ice formation pattern. If only part way up the coil face, evaporator unit could be low on refrigerant. If so, contact your installing technician to assist with troubleshooting.

System runs constantly	
Possible cause	**Solution**
Leaky door seal or poorly insulated cellar	Fix leaky door seal and insulate cellar

Unit leaks water	
Possible cause	**Solution**
Evaporator unit is not level	Evaporator unit should be level on the wall to prevent leaking
Drain line clogged or kinked	Check drain line to make sure water can flow freely
Drain is clogged, preventing water from escaping	Disconnect drain and clear it out; check drain for blockage
Drain line does not have a downward slope	Fix drain line so there is a downward slope from the unit to the drain
Coil is iced, causing drain pan to freeze and water to overflow	Melt ice with blow drier. Soak up with a towel.
Condensate pump needs to be reset	Disconnect and reconnect the black cables attached to the pump

Unit runs but does not cool	
Possible cause	**Solution**
Lack of air flow	Make sure fan is unobstructed and that the evaporator filter, evaporator coil, and condenser coil are clean and free of debris
System undersized	Call a service tech to troubleshoot
Compressor is overheating	Shut system off for 1 hour to allow compressor to cool. Turn back on and check for cooler air flow out. If compressor runs, check for and clean condenser coil as possible cause of compressor overheating. If problem repeats, contact you installing technician to assist with troubleshooting.

Evaporator fan runs but compressor does not	
Possible cause	**Solution**
Running an Anti-Frost Cycle	1) If the system is maintaining the correct cellar temperature and there is a dripping snowflake symbol illuminated on the control, the system is going through an Anti-Frost Cycle. No action is required. 2) If the system is not maintaining the correct cellar temperature, this may be due to a dirty evaporator filter or coil. 3) Call installing technician to troubleshoot, as the system may be low on charge or require an adjustment to the TXV.
Compressor and/or starting components faulty	Please contact the installing technician to troubleshoot
System may be performing the WHM function	Allow cooling system to revert back to cooling mode
Compressor may have overheated	Shut system off for 1 hour to allow compressor to cool. Turn back on and check for cooler air flow out. If compressor runs, check for and clean condenser coil as possible cause of compressor overheating. If problem repeats, contact your installing technician to assist with troubleshooting.

Compressor runs but evaporator fan does not	
Possible cause	**Solution**
Faulty fan motor	Please contact the installing technician to troubleshoot
Faulty controller	Please contact the installing technician to troubleshoot

Compressor short cycles	
Possible cause	**Solution**
Evaporator unit blows on bottle probe	Move bottle probe to a more central location
System low on refrigerant charge	Please contact the installing technician to troubleshoot
Condensing fan motor/capacitor faulty	Please contact the installing technician to troubleshoot
Compressor and /or starting components faulty	Please contact the installing technician to troubleshoot

Humidity in cellar too low	
Possible cause	**Solution**
Not enough moisture	Purchase and place a humidifier (or a decorative fountain) in cellar

SYSTEM OPERATION- KDT

Initial Start-Up
When the unit is plugged in and power is sent to the controller, a beep will sound, confirming that the controller is getting power. All LEDs on the display will blink three times. Three dashes will then appear on the screen. All display LEDs will then blink three times. Once the controller has gone through the initial startup process, and all LEDs have cycled, the home screen will be displayed.

Setpoint
The setpoint is preset at the factory to 14°C. It can be adjusted by the customer between 10°- 21°C in one-degree increments.

Indoor Fan Operation
The indoor fan will run when the controller is calling for cooling and turn off once the cooling cycle has ended. During the cooling cycle, the system will remove some relative humidity from the cellar. Some of the humidity that was removed can be reintroduced into the cellar by adjusting the FdC parameter. (The cooling system is not equipped with a humidifier and does not add humidity.)

For more information about fan settings, refer to the User Menu on page 46.

Anti-Short Cycle
The Anti-Short Cycle ensures that the unit will remain off for a period of five minutes after the unit has reached the setpoint. This allows the pressure in the refrigeration system to equalize prior to starting the compressor.

Once the solenoid relay is de-energized, the controller must wait five minutes before reenergizing the relay. This prevents the compressor from repeatedly turning off and on. If the unit is calling for cooling during this time, the compressor icon will blink, indicating that cooling is needed but the controller is waiting for the Anti-Short Cycle delay.

Anti-Frost Cycle
When the evaporator probe senses a temperature of -3.3°C for a duration of one minute, an Anti-Frost Cycle will be initiated. This will shut down the compressor, allowing the evaporator fan to run and melt any frost accumulation on the coil. While the Anti-Frost Cycle is running, "dEF" will be displayed on the screen. The compressor will remain off until the evaporator coil reaches 4.4°C, or for a maximum of one hour. The unit will then return to normal operation.

Operation in Low Ambient Temperatures
The condensing unit comes equipped with a fan cycle switch, which controls the condenser fan operation to maintain optimal system pressures. During cold ambient temperatures when the high side pressure falls below 75 psi, the fan cycle switch will open and the condenser fan will be shut off to maintain minimum head pressure. Once the pressure reaches 110 psi, the fan cycle switch will close and allow the condenser fan to continue operation.

Digital Display
The display is designed to give the user the ability to adjust the setpoint, Fdc parameter, and other settings. (See User Menu on page 45 for more details.) The bottle probe temperature is displayed by default. "dEF" will be displayed during an Anti-Frost Cycle. The bottle probe and evaporator probe temperatures can be accessed by pushing the SET button and scrolling through "Pb1" (bottle probe) and "Pb2" (evaporator probe). The light button may be used as an unlock button.

Safety Features
In the event of a faulty bottle probe, the compressor will cycle off for 10 minutes and on for 40 minutes. "E1" will be displayed on the screen.

The evaporator unit comes equipped with a condensate pump to remove the condensation produced by the evaporator coil. The reservoir is mounted in the internal drip tray. If the condensate level rises too high, the unit will continue to run in an effort to maintain the temperature inside the cellar.

If you would like to kill power to the unit if the condensate level rises too high. Please see the doA setting on Page 45.

Alarms
See "Alarm Codes" in the Controller Functions chart.

MAINTENANCE SCHEDULE

Monthly	1. Check for debris surrounding condensing unit (leaves, branches, trash, etc); remove all obstructions. 2. Check the drain line to see if it is above the waterline (if draining into a vessel) Inspect the external drain line for functionality. Moisture should be present inside of the drain line if system has been running. If uncertain, remove the evaporator grille and poor water into the drip pan to engage the condensate pump.
Bi-Annual	1. Use a vacuum with brush attachment or compressed air to clean the evaporator coil; be careful not to crush coil fins when cleaning, clean condensing coils also. 2. Remove the evaporator filter and clean with warm water. 3. Ensure the condensing unit is free of debris and dust. 4. Have a certified HVAC-R technician service the condensing unit and clean the condenser coil.
Annually	1. Inspect for corrosion 2. Check wiring connections and integrity of cords 3. Blow out drain line with air to clear any debris or buildup.
Quarterly (Ceiling Mount Units Only)	**Clean out drip pan inside evaporator** 1. Use a Phillips screwdriver to remove screws from evaporator grille and detach the grille. 2. Locate the two thumb screws on side walls of evaporator connected to the drip pan brackets and twist with fingers to unscrew. **NOTE:** For Mini, use screwdriver to remove screws. 3. Remove drip pan from evaporator and clean inside pan with soap & water using a sponge. 4. Inspect pump reservoir for sludge or debris before replacing pan and clear out if needed. 5. Once pan is back in place, pour water into pan to test function of the pump. (Power must be on for this). 6. Once pump function has been verified, drop Air Conditioning Pan Tablet inside of pan, then replace grille with screws.

WhisperKOOL™

WhisperKOOL
1738 E. Alpine Ave
Stockton, CA 95205
www.whisperkool.com